JUNE 2016

TOWN CENTER COMMUNITY IMPROVEMENT DISTRICT

COBB COUNTY, GEORGIA

DESIGN GUIDELINES

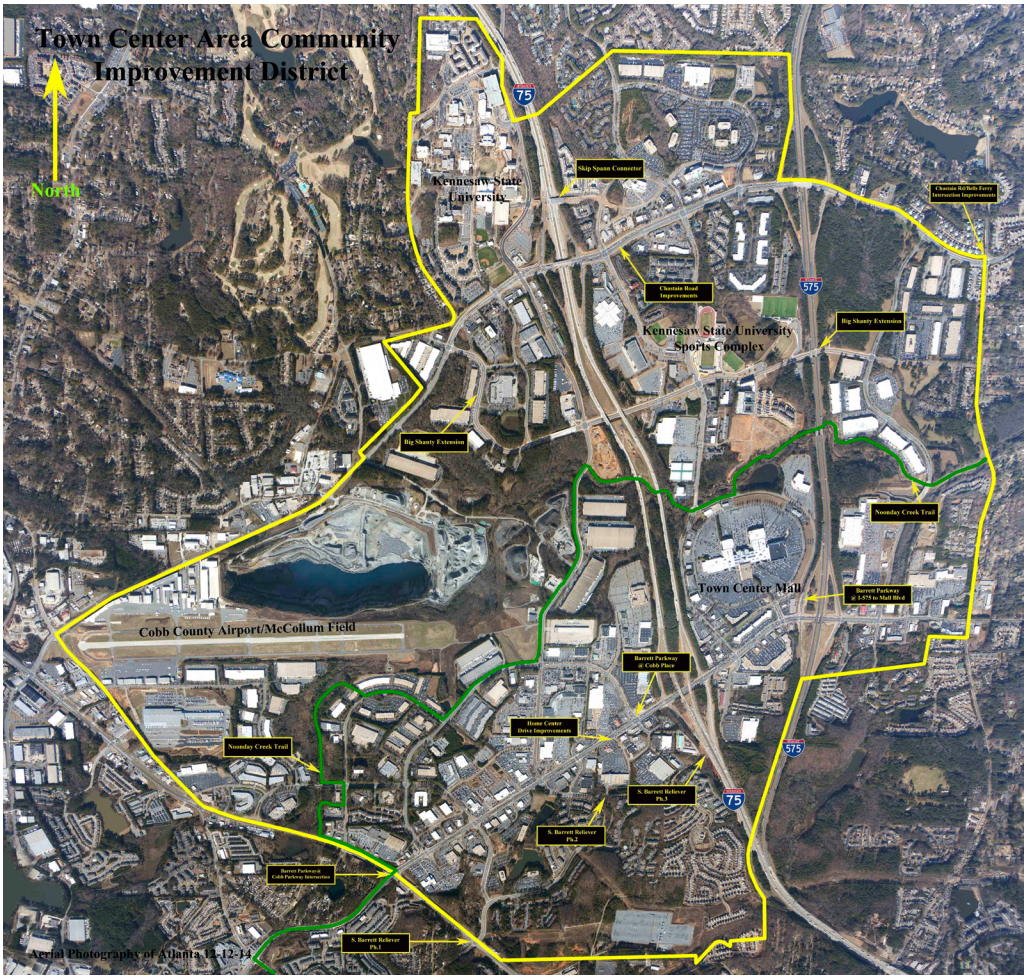

TCCID Boundary is subject to change without notice.

Prepared By:

ATKINS

THIS PAGE INTENTIONALLY LEFT BLANK.

Table of Contents

INTRODUCTION

The following design guidelines serve as standards for all public areas and right-of-ways within the Town Center Community Improvement District (TCCID). These development standards will direct the physical form, overall character and ensure continuity throughout the district.

The Guidelines serve the following function:

- To establish a framework for improvements in the public realm – streets, sidewalks, trails, streetscape and landscape treatment.
- To provide a consistent, cohesive character within the area.
- The creation of a pedestrian friendly walkable environment.
- To create for each tenant or owner a protected investment.
- To make working, shopping and relaxing in Town Center CID an enjoyable experience as it may be amended from time to time.
- The creation of a 'sense of place' in the Town Center CID.

The following guidelines are intended to serve as suggested approaches to design within public areas and right-of-way with the TCCID.

How to Use the Design Guidelines

The Design Guidelines should be used during the design process of public development proposals relating to items such as materials, plantings, lighting, and signage. The diagrams in this manual should be used as a guide and should not replace actual construction details. Actual construction details should be designed to meet all applicable requirements established by the appropriate approving agency. In some site conditions, these diagrams may not be applicable. For such cases and other potential design conflicts, please consult the TCCID. If any conflict occurs between these guidelines and County, State, Federal or other requirements, ordinances, laws or regulations, the more restrictive requirement shall apply.

Reference Materials and Codes

Cobb County Code of Ordinances
Georgia Department of Transportation

Overview of Town Center CID

The Town Center Community Improvement District (TCCID) is located 25 miles north of downtown Atlanta in unincorporated Cobb County. The boundaries of the TCCID lie roughly to the north of Chastain Road, to the south of Barrett Parkway, east to Bells Ferry Road and west to Cobb Parkway. The TCCID area includes Kennesaw State University, Town Center at Cobb Mall, Cobb County International Airport, Office Parks, Commercial/Retail, Restaurants, and Hotels. Two major Interstates travel through the TCCID, I-75 and I-575. The TCCID is a regional activity center, located in a continually growing area and vibrant community.

The TCCID is intended to provide a rich, rewarding environment for living, working, and playing. A coherent and orderly pattern of elements along streets, public spaces, and open space are identified in this document and have been sensitively planned to integrate with the site's natural characteristics.

Four Basic principals will serve as the basis for evaluating all development and design.

- The first principal is to enhance the quality of life for those who work, live, play, and shop within the Town Center CID. In this context, the focus is on creating an environment that supports the human needs. The principal emphasizes the concern for human welfare and reinforces worth of individuals.
- The second principal is to foster a sense of community or shared enterprise in the context of a commerical mixed-use business district. The basic concept is to create physical spaces that encourage interaction and help generate this sense of community. The TCCID design guidelines contain requirements for such features as parks, plazas and other shared facilities. The need for these amenities will be balanced by a concern for other objectives, such as requirements for privacy, security and cost.
- Third, the TCCID should express a sense of quality and timelessness in its physical form through the use of time tested architecture and landscape design principals. The central aim is to produce an enduring design, one that expresses beauty, order and permanence. The Design Guidelines encourage innovation and challenging design, but ensure that individual elements are sensitive to and supportive of the context.
- The fourth and final guiding principal is to emphasize the stewardship of the site's natural and historic features: the vegetation, streams, lake, woodlands, scenic open space and greenways. TCCID's character and appeal can be enhanced from it natural setting.

These four principals — quality of life, shared enterprise, enduring design, and stewardship of natural resources, will form a foundation from which the TCCID will continue to emerge and prosper.

Existing Site Conditions

The planning team collected available data in an effort to understand the site's existing conditions. The data included information relative to topographic, hydrologic, wetland, vegetative, transportation, land-use, zoning, buffer and easement conditions. Site reconnaissance was conducted to ascertain ground level visual conditions. Additional visual information was derived through aerial photography.

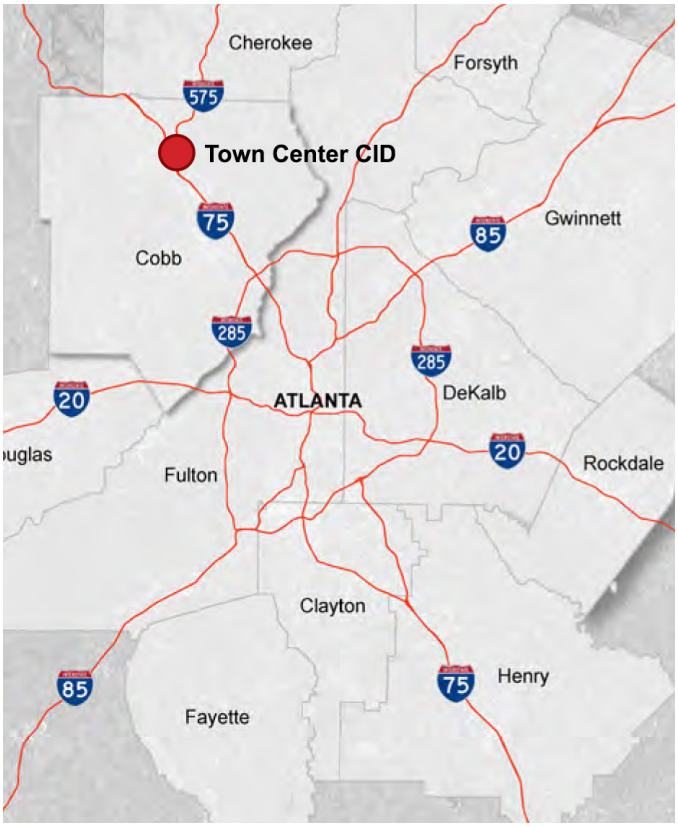

Context Map (TCCID LCI Plan)

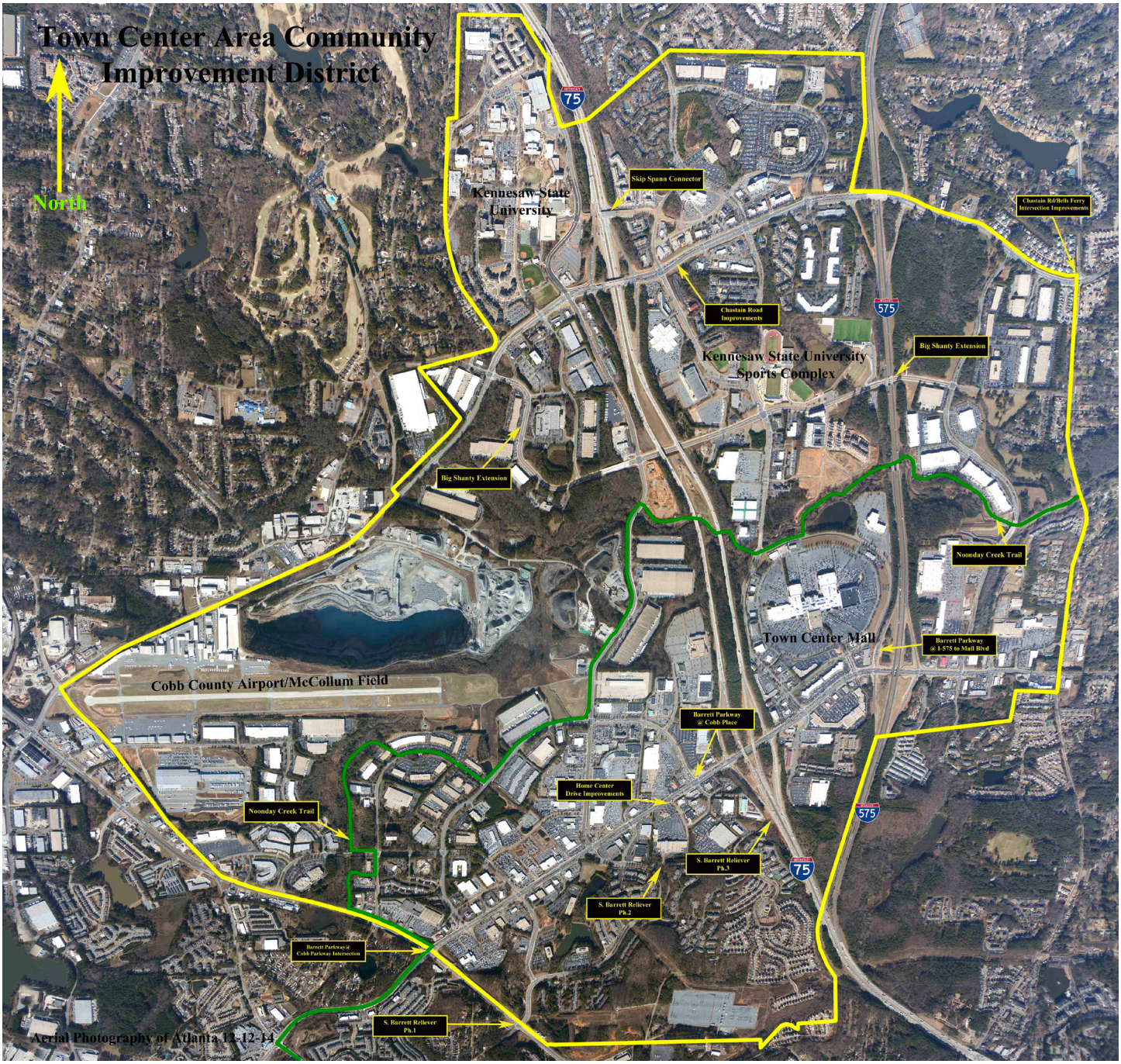

TCCID Boundary.

Planned Transportation Improvements

The Town Center CID Livable Centers Intiative Plan proposes to develop new roadway infrastructure that will connect seamlessly into the existing infrastructure, including direct access to and from local and state roads.

Streetscapes

Streetscapes are a major component of the public realm. The public realm is the principal space where public interaction occurs, these elements help to give a community its identity. Their quality is at the heart of how residents and visitors relate to and experience a community and therefore the Design Guidelines are to encourage aesthetically pleasing streets and buildings which are in harmony with the overall TCCID.

As shown in the figure below, the streetscape encompasses the public right-of-way, its associated vehicular lanes and public frontages, and the private frontages that frame it. These elements make up a large percentage of a community's public realm. The streetscape can be a destination in and of itself, and its design significantly shapes a community's form and how that community functions. In particular, private frontages frame the public right-of-way, giving shape to the streetscape through building placement and design controls on building façades and spaces.

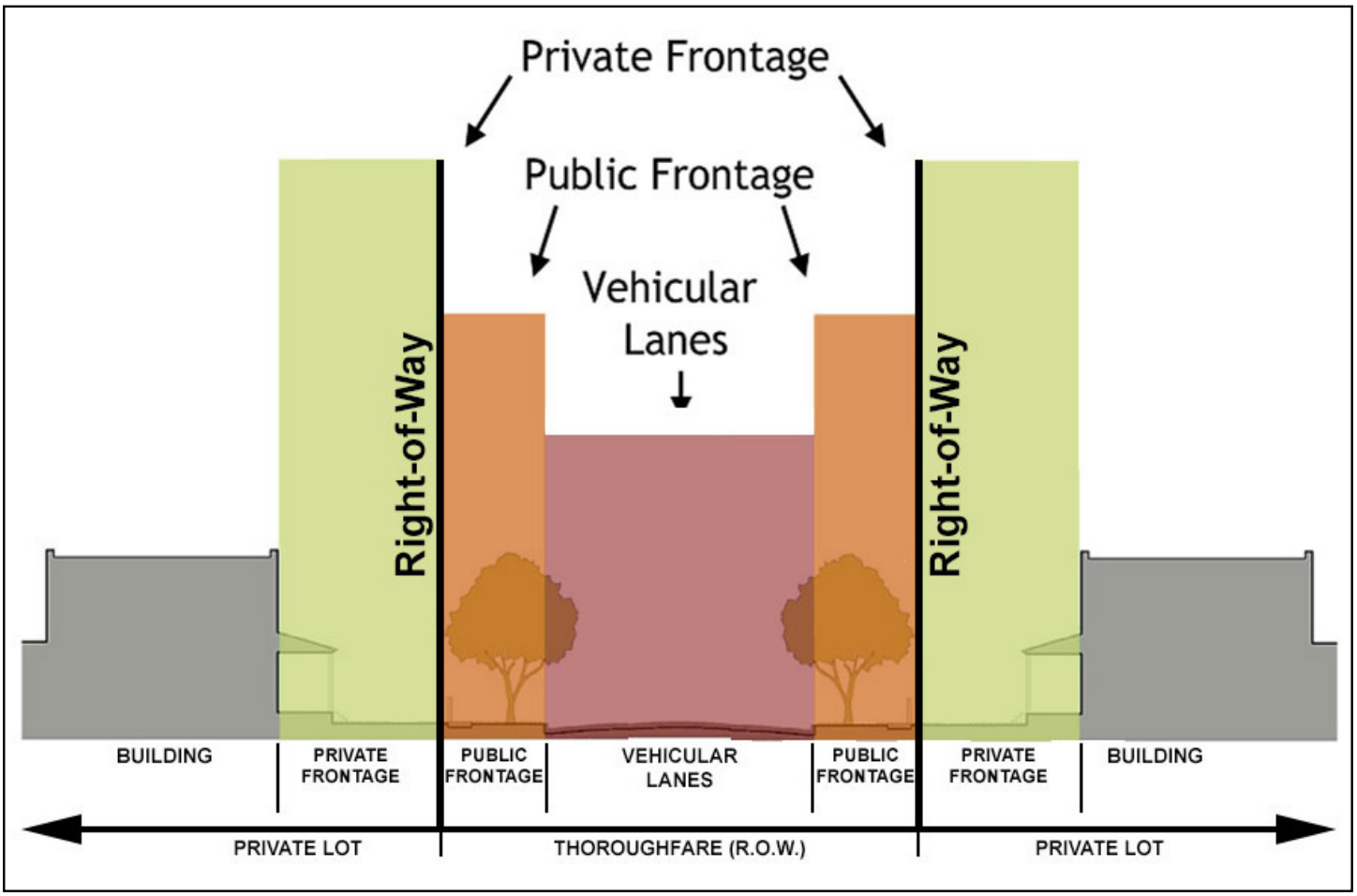

Planned Open Space Improvements

Public parks and open spaces have been preserved and designed to create an identity for the TCCID. The open space within the TCCID is the unifying element between all the land uses. Every effort should be made to ensure that public improvements are integrated and link into the overall Open Space system.

A well-designed and highly-used open space system along with a unique blend of private, public, natural and planned open spaces will enhance the visual appearance of the project and will establish a sense of place and culture for the community. Where possible, the design of public spaces should incorporate a unified architectural theme to increase the sense of place in the TCCID. The type and character of the park and open space should be influenced by its surrounding uses.

With a high-quality open space system the benefits will include:

- Enhanced character and visual appearance.
- Preserved natural features for use by the residents, employees, and visitors.
- Encouraging passive outdoor activity such as walking in a safe environment.
- Enhanced property values.
- Gathering places for both small and large groups.
- Creates a sense of community.

The planned open spaces vary in size and location and every opportunity must be made to enhance the open space as the TCCID projects develop. These spaces offer a wide variety of passive and active recreational experiences ranging in size and type, but together they create an integrated system enhancing livability, natural appearance, and ecological values, while providing gathering places and interaction opportunities for the community.

A minimum of 20% of any developed area is required to be passive parks and open space. Passive Parks, and Open Space is defined as follows: (i)areas retained for use as a resource protection or conservation in an essentially undeveloped state (may include stream buffers, steep slopes, utility easements, construcated wetlands and flood plains), (ii) passive recreation areas (may include village greens, plazas, and greenway trails).

Gateway Entrances

Gateway entrances within open space and road right-of-way areas can be used to enhance the overall project character and visual appearance for the development. Gateway entrances identify the boundaries as you enter into the TCCID. Gateway elements may include a combination of signage/ gateway markers or monuments, pedestrian walkways/plazas, landscaping enhancements, lighting, or water features.

Greenways

Greenways and trails provide connectivity throughout the development and the surrounding region. Greenways occupy areas that contain matured vegetation, floodplain, wetlands, streams, lakes and areas with sensitive natural features located within the site. Greenways can provide walking, biking, and golf cart paths adjacent to Noonday Creek and to the north/south tributaries within the TCCID. Greenways can provide the opportunity for the TCCID community to have a direct link to the natural environment and to adjacent land uses.

Secondary Open Space

In addition to the major open spaces; smaller pocket parks, plazas, boulevards, green spaces, are encouraged within the TCCID. These areas may be linked by sidewalks and pathways. It is envisioned that these planned and designed areas would enhance the visual quality and character of the TCCID.

Natural Open Space

Open Spaces are to stay natural with selected clearing and cutting for the purpose of construction pathways, gardens or other passive activities. Open Space will occupy areas including streams, buffer areas, wetlands, preservation of mature vegetation. The Open Space system will be used primarily for passive activity such as walking, seating or rest areas.

Planned Pedestrian Enhancements

Pedestrian-oriented streets typically include generous sidewalk widths, signage, street lighting, seating, street tree planting, and aesthetically pleasing landscaping. The pedestrian network is comprised of a series of options including standard sidewalk widths, enhanced sidewalks with street furnishing, boardwalks and greenway trails. The planned pedestrian network will connect residences, employees, and visitors to the recreation, public plazas, public parks, businesses, and residences within the TCCID community.

The TCCID pedestrian and bicycle design guidelines are designed to facilitate a safe environment for bicyclists and pedestrians of all ages and abilities. These design guidelines are based on national standards and best practices for this region and around the country. The vision for bicycle and pedestrian facilities are to provide more mobility options for the residents and visitors and to enhance walkability, expand bicycle opportunities and promote economic opportunities within the TCCID. These recommendations and improvements are proposed to coordinate with the Cobb County Bicycle and Pedestrian Facilities Master Plan.

Design Principles

These recommended Pedestrian and Bike Design Guidelines have been tailored to meet the specific pedestrian and bicycle facility development needs for the TCCID. They are based on creating a livable community where bicycling and walking facilities will be incorporated into existing and proposed transportation projects to achieve the overriding goals of improving, safety, convenience, and comfort.

Streets are a critically important part of a livable and healthy community and there is a growing demand for multimodal streets. This document adheres to the "Complete Streets Principle" that roadways shall be planned, designed, and developed to enable safe, attractive, and comfortable access and travel for all users which includes walking, biking, and public transit, to coexist with automobiles. The Complete Street Act is currently being debated in Congress and should it be approved, it will require that "all federally funded transportation projects, (with certain exceptions), must accommodate the safety and convenience of all users in accordance with certain Complete Street Principles". This will ensure that the safety and convenience of all users of a transportation system, including pedestrian, bicyclist, public transit users, and motorists are accommodated in all phases of project planning and development.

This document is also based on the principle of providing guidance to transportation (roads, sidewalks, trails, and greenway) improvement projects. The pedestrian and bike improvements must be aesthetically pleasing and contextually sensitive to the environment and community. Pedestrian and Bike improvements must incorporate an understanding of important and often competing values of interest, but also through the collaboration of technical professionals, local government, community interest groups, and stakeholders who live, work, and use these facilities. Successful solutions that address safety, mobility, and the communities overall interest shall prevail.

Pedestrian Walkway Facilities

The TCCID pedestrian facilities include sidewalks, crosswalks, traffic signals, signage, lighting, and site furnishings, such as benches and trash receptacles. These planned facilities must meet AASHTO, MUTCD, GDOT, and Cobb County design standards.

Sidewalk Standards:

The sidewalk corridor is typically the portion of the pedestrian system from the edge of the roadway to the edge of the right-of-way or property line. Successful sidewalks include minimal obstacles, moderate grades and slopes, rest areas outside of the pathways, minimal changes in level areas, firm, stable, and slip resistant surfaces, and adequate lighting.

The Design Guidelines for the TCCID recommend that the sidewalk system shall be developed and divided into three zones. The system is used to determine the width of the sidewalk improvements for each land-use and roadway classification. The three zones within the sidewalk corridor are referred to as the frontage, the sidewalk zone, and the pedestrian buffer

The frontage zone separates pedestrians from building fronts by providing distance between the property line and the sidewalks. If the sidewalk is adjacent to open spaces, such as residential areas, or parks, the frontage zone can be eliminated. Typically the frontage zone is used in more urban areas. Sidewalks should be free of obstacles and protruding

objects. In urban situations, sidewalks against buildings need additional width and vertical clearance to allow for building awnings and signage.

The minimum sidewalk zone is the paved walking area. In urban areas, or areas of high pedestrian use, wider sidewalks of 8' to 14' are desirable; and preferred for providing additional comfort and space for users. The width of a sidewalk throughway is one of the most significant factors in determining the type of pedestrian experience. In urban areas, the sidewalks can be paved from the back of the curb to property lines. In other less dense areas such as residential areas, the paved portion of the sidewalk may be setback from the street leaving space for a pedestrian buffer/furnishing zone that can accommodate beauty/grass strip, lighting, street furniture, signage, or underground utilities.

In the TCCID where sidewalks currently exist, but need to be replaced or repaired, are to meet the Cobb County standard width of five (5) feet. A six (6) foot sidewalk width is desirable if right-of-way and other site conditions allow. This width is comfortable and allows two pedestrians, including handicap users, to walk side by side, or to pass each other. It can also provide enough space for two pedestrians to pass a third pedestrian without leaving the sidewalk. Sidewalks should be clear of obstructions such as sign posts, utility and signal poles, mailboxes, parking meters, fire hydrants, trees, and other street furniture

A pedestrian buffer/furnishing zone is also proposed in both urban and residential areas, often referred to as a planting strip. The planting strip provides a buffer between pedestrians and vehicular travel lanes. This separation improves safety, helps decrease road noise, prevents splashing onto sidewalk users, and creates a more positive experience for all. The pedestrian buffer/furnishing zones provide a place for sign posts, parking meters, fire hydrants, underground utilities and site furnishings to be located. Whenever feasible, utility poles should be located at the back or outside edge of the street right-of-way. All items located within the pedestrian buffer zone should meet AASHTO clear zone standards for the particular roadway.

When cars are parked perpendicular or diagonally to sidewalks, either within the right of way or on private property, they can create obstructions to the walkway with excessive overhang. A minimum of a four-foot parking lot buffer with wheel stops shall be provided to prevent car overhang and narrowing usable sidewalk width. When feasible the TCCID goal is to provide a complete street section.

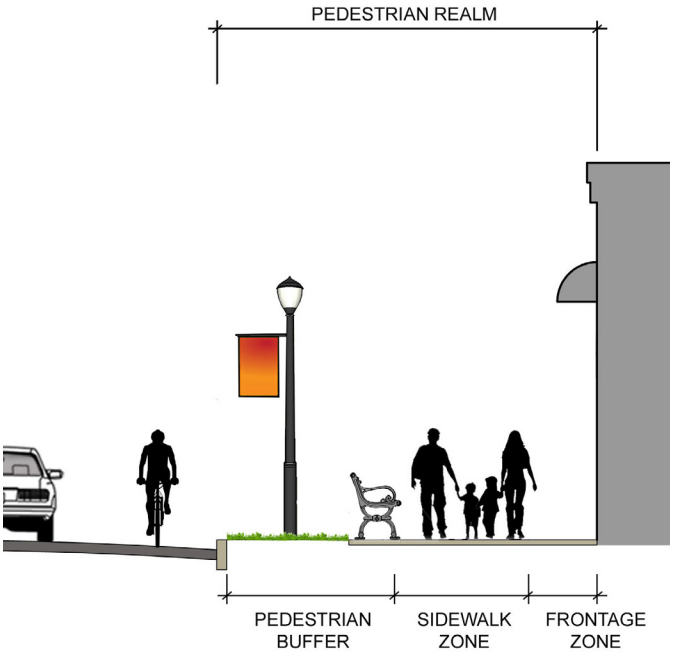

Typical Section of Urban Area

Typical Section of Parking Facility at Sidewalk

Planned Project Signage

Signage and graphic design should be developed to establish a visually distinctive and functional system to attract and communicate with those who work, visit, and live in the community. It should create a lasting identity and provide way-finding clarity. The intent is to provide flexibility while keeping with community standards. All sign square footages shall be calculated per face and are exclusive of the sign monument. Signage shall be reviewed and approved by the TCCID, County, and GDOT as appropriate.

Gateway Identification

The major gateway signage for the TCCID will act as the main visual link to the area and announce the arrival to tens of thousands of daily commuters. This is a critical part of the TCCID's initial impression, the gateway will include expansive landscape and hardscape features, dynamic signage and graphics, and lighting that will make visitors take notice, while establishing a sense of place and arrival point. The major gateway will define the TCCID's unique environment and reflect the architectural and landscape style of the development.

Secondary Gateway Identification

These signage elements are proposed to be similar in style to the major project identification but would be smaller in scale. They are planned to be located at secondary access points. Medium-sized gateway sign elements, with a combination of landscaping and lighting improvements may be utilized.

Way-Finding and District Identity Signage

The district identity signage is planned for major intersections. These will be smaller than the main entrance treatments, but constructed of similar styles, colors and materials. Similar landscaping and lighting is also planned to be incorporated to enhance the visibility and appearance of the signage.

Minor Information and Directional Signs

Minor information signs are proposed to guide visitors and pedestrians to buildings, businesses, parking lots and points of interest. Ideally, these lit-surface-mounted or freestanding signs will be located along plazas, entranceways and along drop-off areas. The colors, logo, images and materials will be designed to be compatible with the district and way-finding signage.

Regulatory Signs

Regulatory signs along streets and parking areas that address stop locations, speed limits, parking restrictions, and other requirements are proposed to be incorporated into a coordinated sign program. These signs could be installed on a separate ornamental decorative post or attached to an existing structure. The signs will include ornamental backing and frames.

Lighting Design

Good outdoor lighting serves a number of uses by increasing safety and enhancing the developments nighttime character. However, improperly designed and/or installed lighting can create problems of excessive glare, light trespass, decreased safety and higher energy use.

Lighting fixtures should be consistent within the TCCID area and along the proposed road corridors. Lighting should be placed at an appropriate distance to achieve the desired illumination levels determined by a qualified engineer or other design professional. Mounting heights vary depending on final spacing and the illumination levels. The type of light sources to be used for any exterior lighting shall meet all approved regulations. The purpose is to provide clarity for vehicular and pedestrian movement without needlessly lighting adjacent properties. All lighting design shall refer to the TCCID Lighting Master Plan Standards and Guidelines.

II Site Design

Introduction

The intent of the Site Design Guidelines is to provide well-coordinated public site amenities and improvements within the TCCID. Adhering to these guidelines can create a lasting identity and promote a high quality environment.

Desirable Typical Sections

As part of the design guidelines a desirable street section and multi-use trail section was created. These sections show the desired widths and relationships for travel lanes, sidewalks, multi-use trails, and landscape areas.

One of the desired elements within the TCCID is a comprehensive sidewalk network for commercial corridors. This allows for increased pedestrian mobility, promotes non-motorized methods of transportation and allows for attractive areas for public gathering and outdoor dining. Sidewalks shall be wide enough to accommodate through pedestrian traffic as well as amenities such as street furniture, pedestrian-scaled lighting, trees and landscaping. Successful sidewalks include minimal obstacles; moderate grades and slopes; rest areas outside of the pathways; minimal changes in level areas; firm, stable, and slip resistant surfaces; and adequate lighting.

Another desirable component for pedestrians are multi-use trails, sidepaths, and paved trails. A sidepath is a multi-use facility that runs adjacent to a roadway. A trail is typically located within a linear greenway corridor which may be natural (streams, wetlands) or manmade (abandoned rail line or utility corridors). Multi-use sidepaths and trails are designed to accommodate a variety of users including bicyclists, walkers, hikers, joggers, skaters, horseback riders, and those confined to wheelchairs.

Multi-use sidepaths and trails are are an important recreational amenity for communities. They provide connections to neighborhoods, schools, parks, and other community landmarks. Sidepaths and paved multi-use trails are generally located in or near urbanized areas. Unpaved multi–use trails are generally located in rural areas and also provide access to environmentally sensitive areas.

Where space is limited to accommodate a separate bike lane and a sidewalk, a multi-use sidepath may be the best alternative to facilitate the safe movement of all users. To prevent conflicts with motorists, a multi-use sidepath is best located where corridors have fewer driveways and intersections, and is located within the right-of-way. It is also advantageous if the multi-use sidepath is part of a bicycle route system with other bicycle facilities, such as paved shoulders and/or marked bike lanes.

ADA Compliant

It is required that all facilities for the use of the general public be planned to accommodate disabled persons in accordance with Public Law 101-336, The Americans with Disabilities Act (ADA) of 1990, and the “ADA Accessibility Guidelines.”

Parking lots and all vehicular circulation use must be ADA compliant with the required number of handicap spaces, accessible stalls and aisles, ramps and gradients. The handicap accessible stalls should be designed, marked and located closest to the main entry. The correct number of handicap parking spaces shall be provided per County Code. Sidewalks leading to the building entry especially from parking lots and crosswalks should have the appropriate depressed curb, width, slope and handrails if necessary to provide an uninterrupted, barrier-free access.

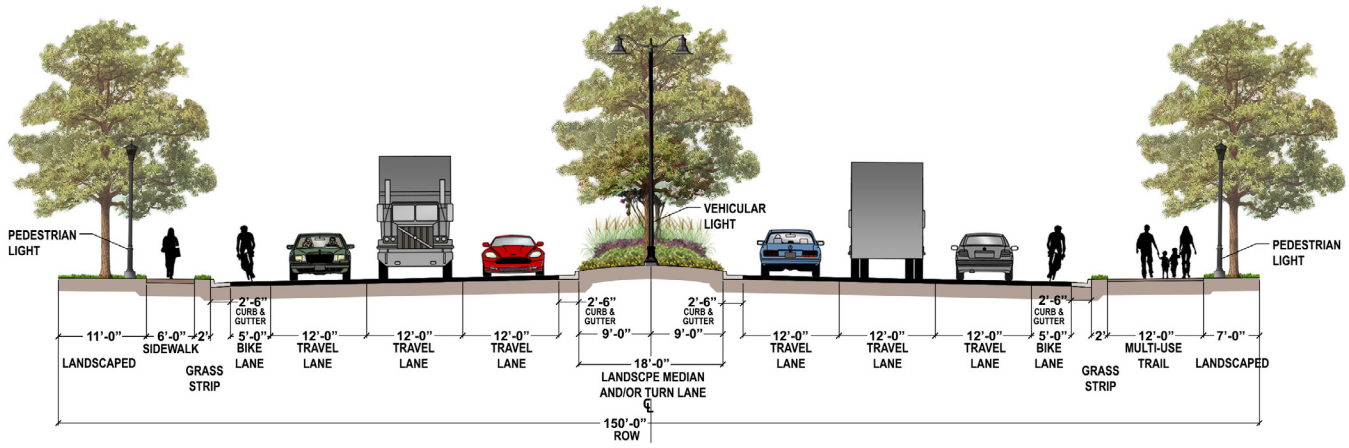
PEDESTRIAN LIGHT
VEHICULAR LIGHT
PEDESTRIAN LIGHT
11'-0" LANDSCAPED
6'-0" SIDEWALK
2' GRASS STRIP
2'-6" CURB & GUTTER
5'-0" BIKE LANE
12'-0" TRAVEL LANE
12'-0" TRAVEL LANE
12'-0" TRAVEL LANE
2'-6" CURB & GUTTER
9'-0"
9'-0"
2'-6" CURB & GUTTER
18'-0" LANDSCPE MEDIAN AND/OR TURN LANE
12'-0" TRAVEL LANE
12'-0" TRAVEL LANE
12'-0" TRAVEL LANE
2'-6" CURB & GUTTER
5'-0" BIKE LANE
2' GRASS STRIP
12'-0" MULTI-USE TRAIL
7'-0" LANDSCAPED
150'-0" ROW

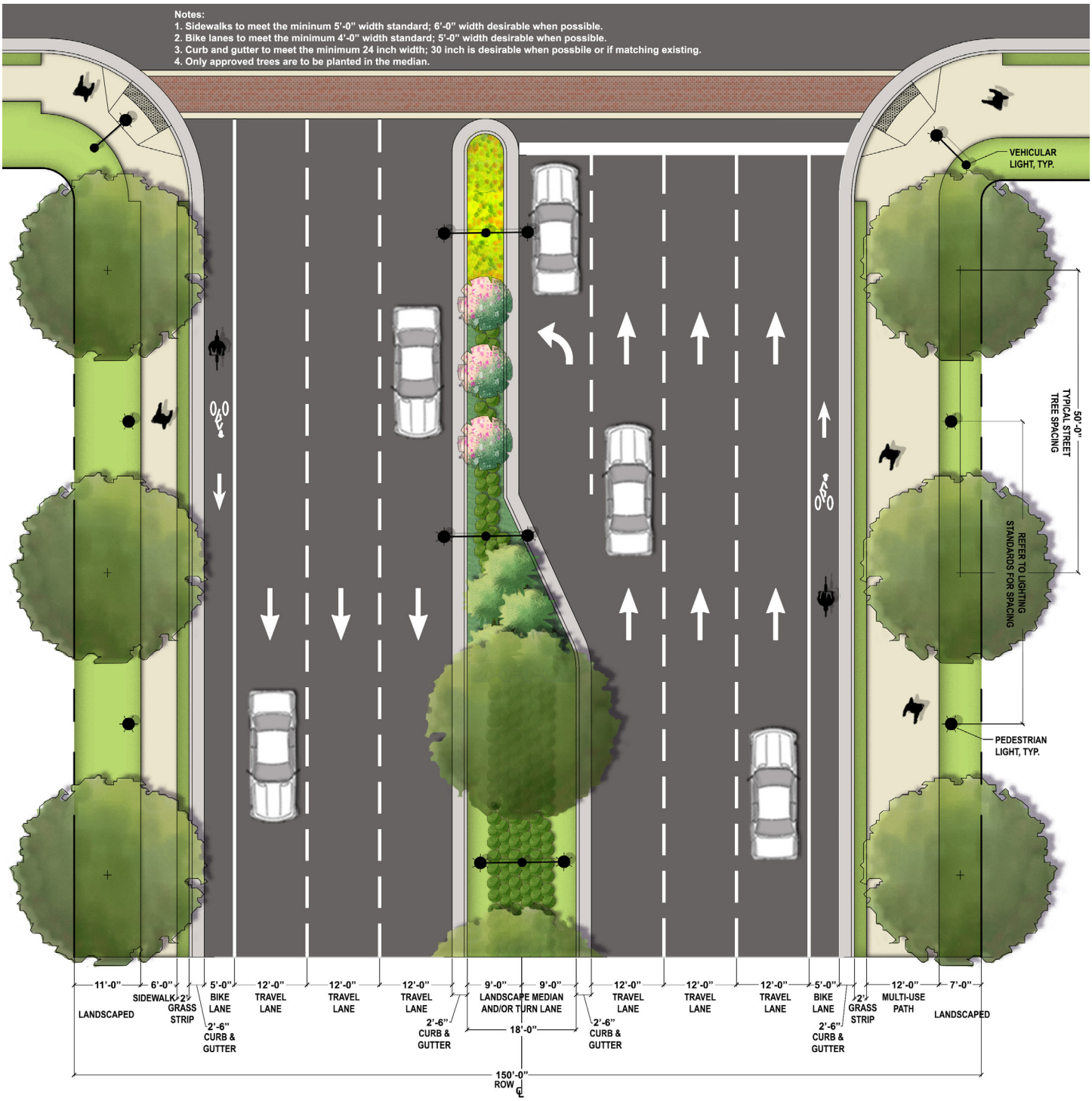
Notes:
1. Sidewalks to meet the mininum 5'-0" width standard; 6'-0" width desirable when possible.
2. Bike lanes to meet the minimum 4'-0" width standard; 5'-0" width desirable when possible.
3. Curb and gutter to meet the minimum 24 inch width; 30 inch is desirable when possbile or if matching existing.
4. Only approved trees are to be planted in the median.
VEHICULAR LIGHT, TYP.
50'-0" TYPICAL STREET TREE SPACING
REFER TO LIGHTING STANDARDS FOR SPACING
PEDESTRIAN LIGHT, TYP.
11'-0" LANDSCAPED
6'-0" SIDEWALK
2' GRASS STRIP
2'-6" CURB & GUTTER
5'-0" BIKE LANE
12'-0" TRAVEL LANE
12'-0" TRAVEL LANE
12'-0" TRAVEL LANE
2'-6" CURB & GUTTER
9'-0" LANDSCAPE MEDIAN AND/OR TURN LANE
9'-0"
18'-0"
2'-6" CURB & GUTTER
12'-0" TRAVEL LANE
12'-0" TRAVEL LANE
12'-0" TRAVEL LANE
5'-0" BIKE LANE
2'-6" CURB & GUTTER
2' GRASS STRIP
12'-0" MULTI-USE PATH
7'-0" LANDSCAPED
150'-0" ROW

Desirable Design Criteria for Sidewalks, Multi-Use Trails, and Paved Trails:

Sidewalks

- Sidewalks and crossing improvements must meet AASHTO, MUTCD, GDOT, and the Cobb County code of ordinances.
- Sidewalks shall be in compliance with ADA standards for Accessible Design.
- Sidewalks shall be located along both sides of all public streets and within the existing right-of-way.
- All grade changes along sidewalks shall be clearly marked.
- All sidewalks shall be composed of concrete and or with decorative concrete or pavers at intersection locations.
- All sidewalk surfaces shall be smooth concrete or paver surface that is slip resistant and meets ADA and AASHTO requirements.
- Sidewalks accompanying new construction shall have a min. width of five (5) feet; six (6) feet is desirable where possible.
- A minimum two (2) foot or larger grass strip is desirable between the back of curb and sidewalk.
- Pedestrian street lights and street trees contained within the furniture and planting zone shall be placed on an alternating pattern so that a equal distance between them is maintained.
- Should permanent obstructions occur in the sidewalk path, a minimum of four (4) feet of clearance shall be provided. All obstructions that can be relocated should be located outside of the sidewalk zone.
- Including space for window shopping and outdoor cafes is encouraged.
- A minimum of eight (8) feet is required for vertical clearance on sidewalks.
- Gaps and grate openings should not allow passage of a .5 inch sphere or the long dimension of the opening should be perpendicular or diagonal to the dominant direction of travel.
- The maximum cross-slope for a walkway is 2 percent.
- At driveways, curb cuts, and road approaches, a 4-foot minimum sidewalk area must be maintained at 2 percent cross slope. Additional right-of-way may be secured to maintain minimum sidewalk widths and slopes when crossing driveways or curb cuts.
- Sidewalks that are narrow or in steep terrain areas (greater than 5% slope) should provide rest and passing areas outside of the pedestrian zone as appropriate.
- Pedestrian signage, indicating the upcoming grade, is recommended in steep terrain areas (greater than 5% slope).
- It is recommended that the larger the sidewalk width, a larger width planter or furnishing zone should be provided.
- When transit stops are provided, larger furnishing zones are recommended. Transit requirements vary, but should be coordinated with and connected to an accessible path of travel.
- Street tree plantings improve the aesthetic appearance of the street, and provide shade or shelter in warm and windy regions. Tree and root protection devices should be used to minimize sidewalk and paving maintenance issues. The proper tree should be chosen based on the tree and site characteristics. Refer to GDOT and County requirements for tree selection and setback requirements.
- Tree planting shall not be allowed in the grass/beauty strip area between the back of curb and sidewalk.
- Only approved trees shall be planted in the median.
- Trees planted withing the roadway clear zones should not exceed four (4) inch caliper at maturity. Trees should not be planted within intersection or driveway sight distance triangles. Shrubs planted within sight triangles should not exceed three (3) feet in height at maturity. Trees and other plantings should not restrict roadway stopping sight distance especially on roadway curves.

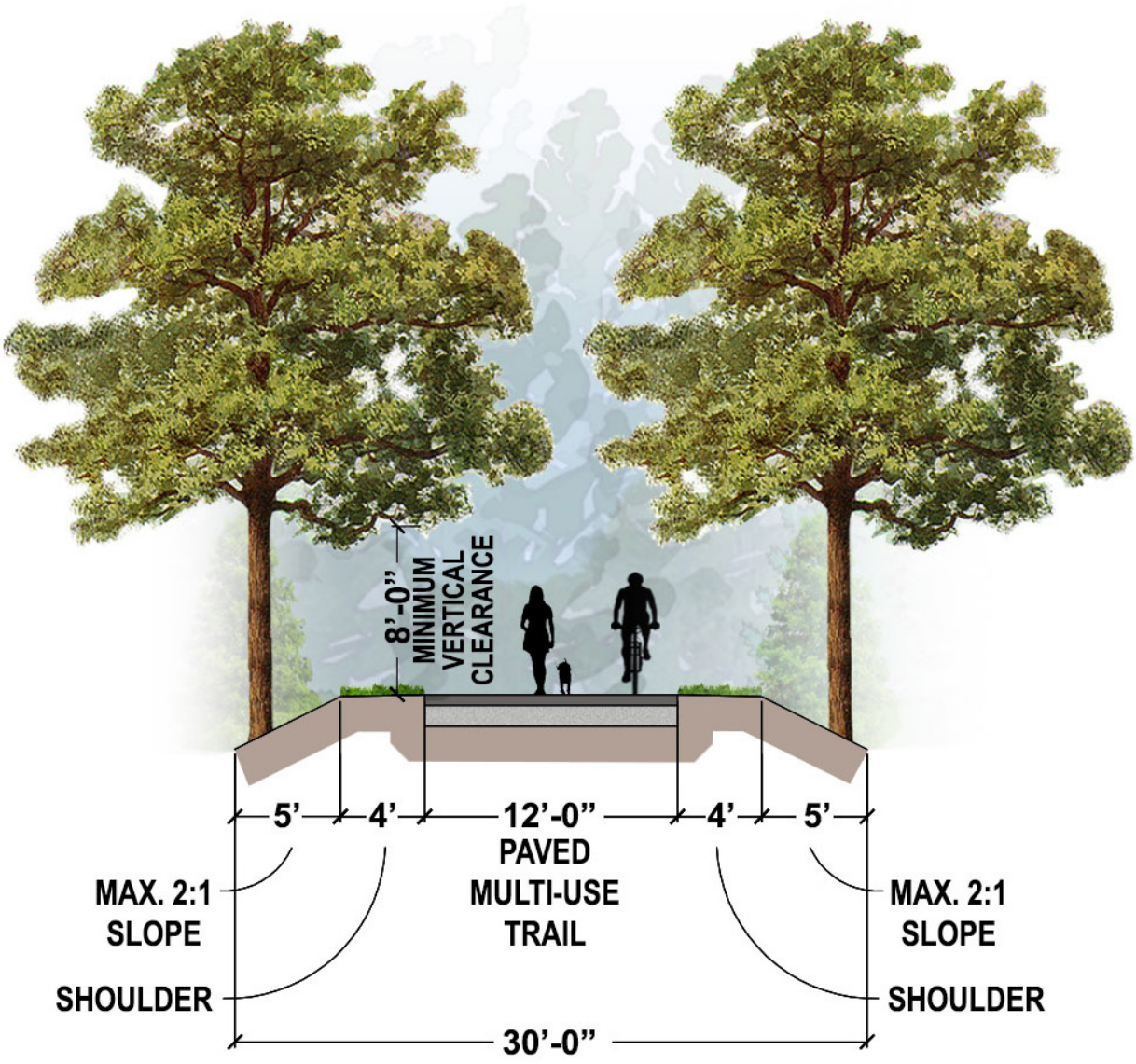

Multi-Use Trails

- Multi-use trails shall be planned for future connection to the TCCID trail system. Multi-use trails are to be designed to meet Cobb County standards. Paths to be a minimum of 8 feet wide, 12 feet is desirable.
- A two-directional sidepath should have a minimum width of 10 feet with at least a 2 foot graded shoulder area at both sides of path.
- A sidepath should have a minimum vertical clearance of 8 feet.
- A planted buffer of 3 to 5 feet (5 feet preferably) between edge of path and ROW shall be provided.
- The sidepath should be paved concrete.
- Provide removal bollards at intersection or roads and multi-use side paths. Multi-use side paths often need some form of physical barrier at intersections to prevent unauthorized motor vehicles from using the facilities. Provisions can be made for a lockable, removable (or reclining) barrier post to permit entrance by authorized vehicles.
- When crossing a road, side paths shall cross at 90 degree angle.
- At intersections, side paths shall provide connections to existing sidewalks.
- Post or bollards should be setback beyond the clear zone on the crossing roadway or be a breakaway design. The

post should be permanently reflectorized for nighttime visibility and painted a bright color for improved daytime visibility. When more than one post is provided, a minimum of 5-foot spacing is desirable between posts.

- Provide signing and marking for multi-use paths in accordance with AASHTO and MUTCD design standards.
- Well designed transitions from sidepaths to on-road facilities will direct bicyclists to the correct side of the roadway.
- Coordination with utility provider will be necessary if multi-use sidepath is located within the utility corridor.

Paved Trails

- The minimum width for a one-way paved facility is 6 feet.
- The minimum width for a two-way paved facility is 10 feet.
- Selective thinning is meant to provide visibility along the trail or pathway corridor. Mature trees that do not create a site distance hazard should be maintained. Additional selective clearing may be required to provide adequate sight lines and safety for the trail users.
- On trails with heavy pedestrian and bicyclist use, a 12-foot wide multi-use trail facility is desired with a 4-foot shoulder on both sides.
- Multi-use trails must conform to ADA and MUTCD standards.
- The recommended surface for paved facilities shall be concrete or asphalt and should be designed to withstand the loading requirements of emergency and maintenance vehicles.
- Location maps, directional, mileage, and navigational and regulatory signage (“rules of the trail”) shall be posted.
- In flood prone areas, multi-purpose trails should be constructed of concrete.
- Centerline stripes should be provided for paths that generate substantial amounts of traffic.
- Side slopes shall be a maximum of 1:6 adjacent to both sides of the trail. When the bottom of the slope is unsafe, a dense shrubbery, chain link fence, or other physical barrier may be required.
- The minimum vertical clearance is 10 feet. Greater clearance for maintenance and emergency vehicles may be required.
- Trails need to be well drained with a 2 percent cross slope.
- Environmental and wetland impacts should be minimized.
- Cautionary signs should be provided for steep slopes, blind curves, and other potential hazards.
- Refer to AASHTO design standards for design speed, horizontal alignment, grade, sight distance requirements and other related design requirements.
- Slopes greater than 5 percent are considered undesirable. When slopes exceed 5 percent on a heavy use multi-purpose trail, increase the width to 14 feet. Provide signage that alerts bicyclist of maximum percent grade.
- Refer to local, state, and federal stream buffer set-back requirements when designing multi-use paths and trails adjacent to wetlands, creeks, and waterways.
- Provide native landscaping to enhance wildlife and protect natural landscape along trail corridors in areas to be revegetated. Avoid using harmful pesticides and planting invasive plant material.
- When designing a paved trail or path seek a soil engineer evaluation and a geotechnical report of existing site soil conditions to determine final recommendations of trail pavement design.
- Elevated structures should be provided when slopes or environmental conditions warrant.
- Provide rest and pull off areas on steep slopes (greater than 5% slope) as appropriate.
- Along with the multi-use paths and trails provide the opportunity for designated picnic and seating areas.

4.0 Site Elements and Furnishings

Bench

Dumor, Inc. or approved equal
Bench 119

Description:

- Standard contoured all-solid steel bench.
- Clearance for 1/2 inch anchor bolt to secure bench.
- Standard six (6) foot or eight (8) footlength with two (2) inch steel legs and arm rests, with center arm rest. Length shall be approved prior to ordering.
- Color: black with powder coating finish.
- Install per manufacturer's recommendations.

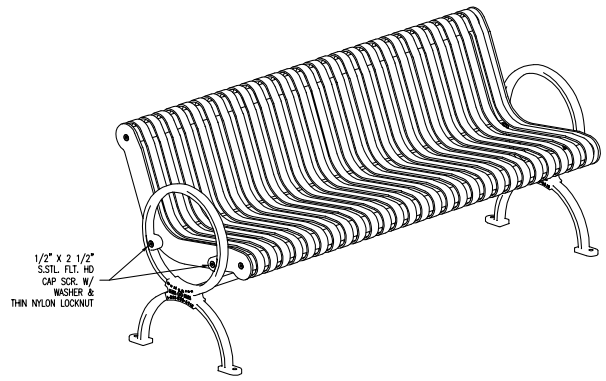

NOTES:
1.) ALL STL. MEMBERS COATED W/ ZINC RICH EPOXY THEN FINISHED W/ POLYESTER POWDER COATING.
2.) 1/2" X 3 3/4" EXPANSION ANCHOR BOLTS PROVIDED.

LENGTH OPTIONS
☐ 6' BENCH
☐ 8' BENCH

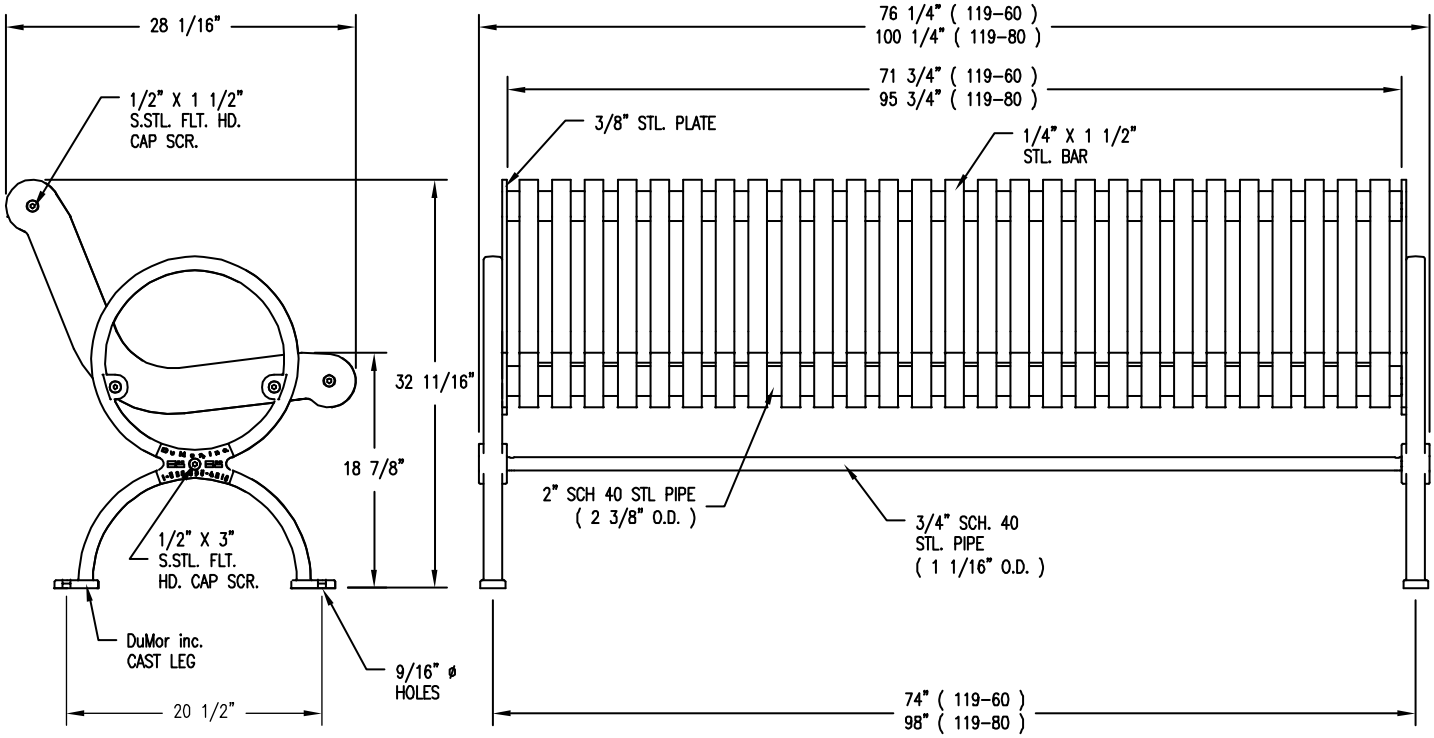

Trash Receptacle

Canterbury International, Inc. approved or equal
Receptacle PADC Model 103
with Ash Urn Lid

Description:

- 32-gallon litter receptacle.
- 32-gallon capacity high density plastic liner.
- Cast aluminum with welded construction.
- Solid steel bars and bands.
- All steel members finished with black powder coat finish.
- Hardware (stainless steel).
- Install per manufacturer's recommendations.

PACKAGING: UNITS ARE SHIPPED FULLY ASSEMBLED.
ORDERING: WHEN ORDERING SPECIFY: "MODEL 103 - PENNSYLVANIA AVENUE ASH/TRASH RECEPTACLE WITH DOOR" PLUS 2 SIDE OPENINGS AND FINISH.

MANUFACTURER: CANTERBURY INTERNATIONAL
5632 WEST WASHINGTON BOULEVARD
LOS ANGELES, CALIFORNIA 90016
TELEPHONE: 900-935-7111

CONCOURSE SERIES: PENNSYLVANIA AVENUE MODEL 103

DESCRIPTION: AVAILABLE IN LIDDED VERSION AND AN ASH/TRASH COMBO. POWDER COAT FINISH FASTENERS, BLACK FINISH SGFSGFSDGSG

SPECIFICATIONS:
MATERIAL: BARREL - CAST ALUMINUM W/ WELDED CONSTRUCTION.
LINER - REMOVABLE RIGID PLASTIC.
TOP - CAST ALUMINUM
FINISHES: STD. BLACK OR COLOR PER OUR STANDARD COLOR CHART. CUSTOM COLORS AVAILABLE. CUSTOMER TO SPECIFY.

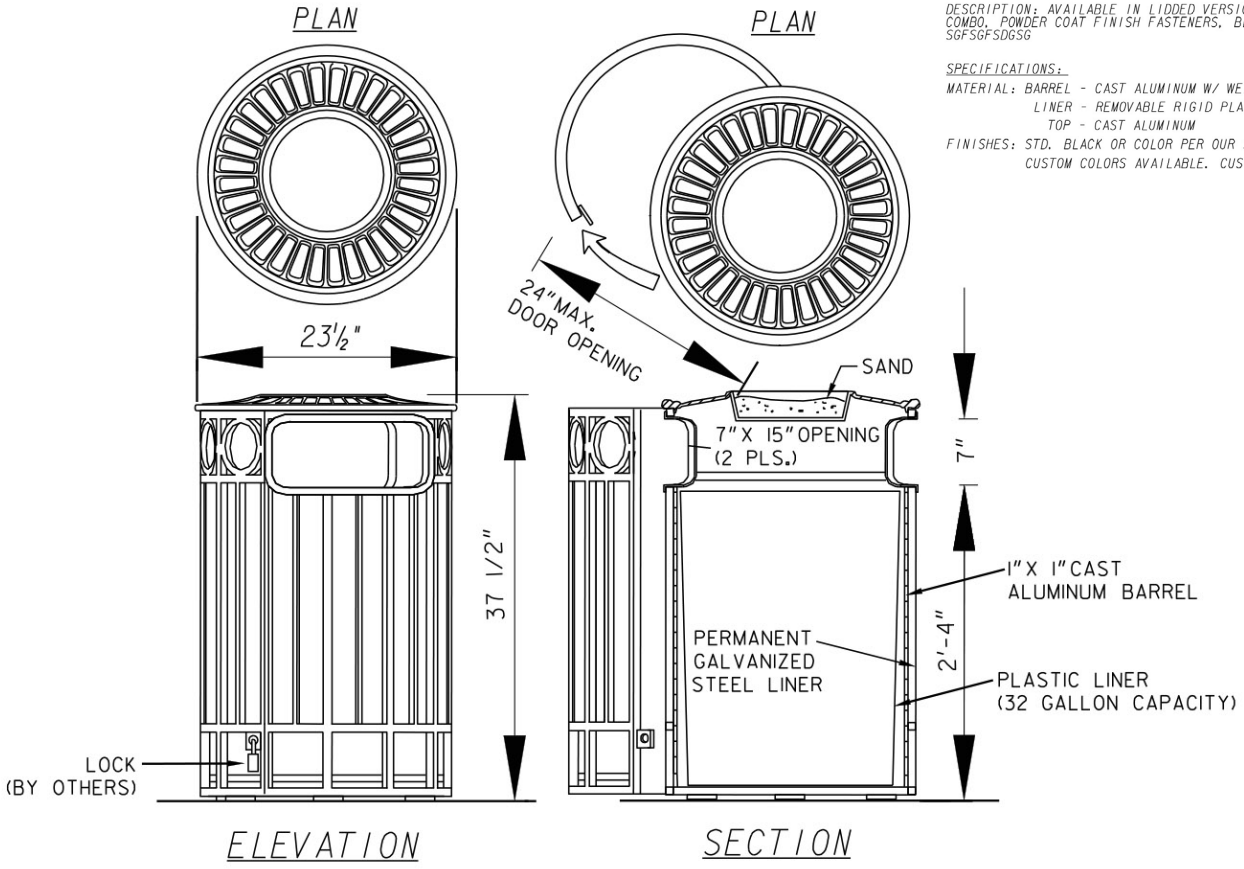

Ash-Urns

Dumor, Inc. or approved equal
Ash Urn 80

Description:

- All steel members finished with black powder coat finish.
- Hardware (stainless steel).
- Install per manufacturer's recommendations.

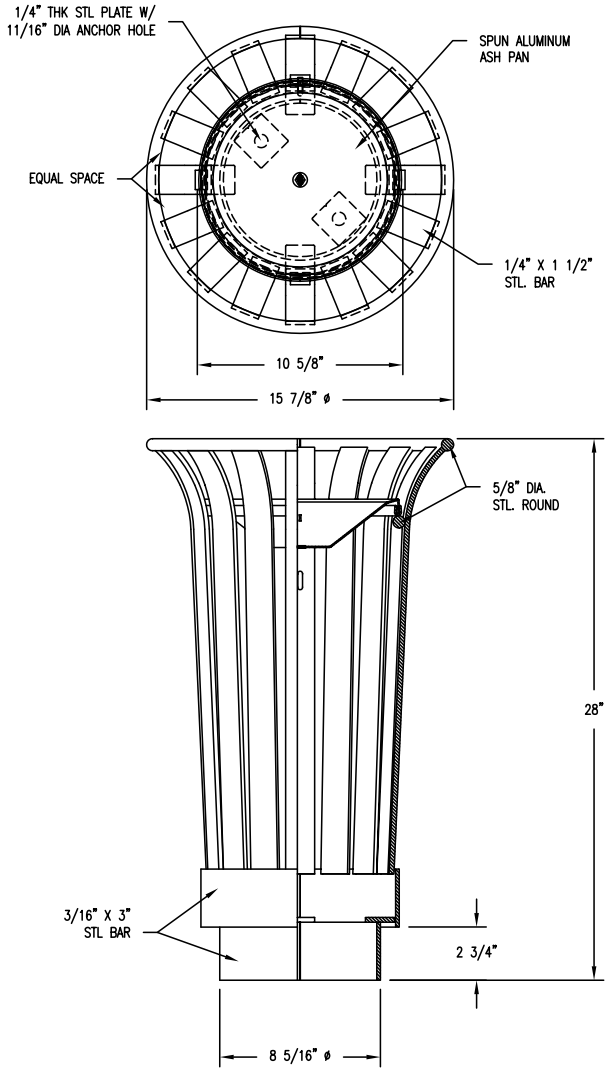

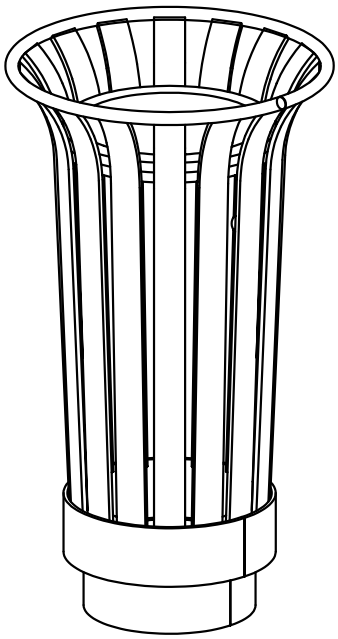

NOTES

1.) ALL STL. MEMBERS COATED W/ ZINC RICH EPOXY THEN FINISHED W/ POLYESTER POWDER COATING.
2.) 1/2" X 3 3/4" EXPANSION ANCHOR BOLTS PROVIDED.
3.) ASH URN FULLY ASSEMBLED AT FACTORY.

Dog Waste Disposal Station

Pet Waste Eliminator or approved equal
Superior Pet Waste Eliminator

Description:

- 1 Pet waste bag dispenser box, locking front access door, holds two rolls of bags each containing 200 bags (400 total) or 560 pet waste bags on header.
- 1 Pet waste sign - 12”W x 18” H (To be included and a sample to be provided and approved by owner).
- 1 Steel U-channel post - 8 foot.
- 1 Steel trash receptacle and liner - 10 gallon.
- Hardware (stainless steel).
- Biodegradable pet waste bags, made in the USA, minimum 1 mil thickness, low density polyethylene (LDPE) plastic opens easier opens easier and oes not stick together, opaque bags (contents not visible).
- Finish and color: All components (post, dispenser box, disposal basket, etc...) shall be have a black powder coat finish.
- Install per manufacturer’s recommendations.

Bicycle Rack

Victor Stanley or approved equal
Bike Rack BRHS-101
Cycle Sentry Collection

Description:

- All steel members finished with black powder coat finish.
- Embedment mounting option required.
- Hardware (stainless steel).
- Install per manufacturer's recommendations.

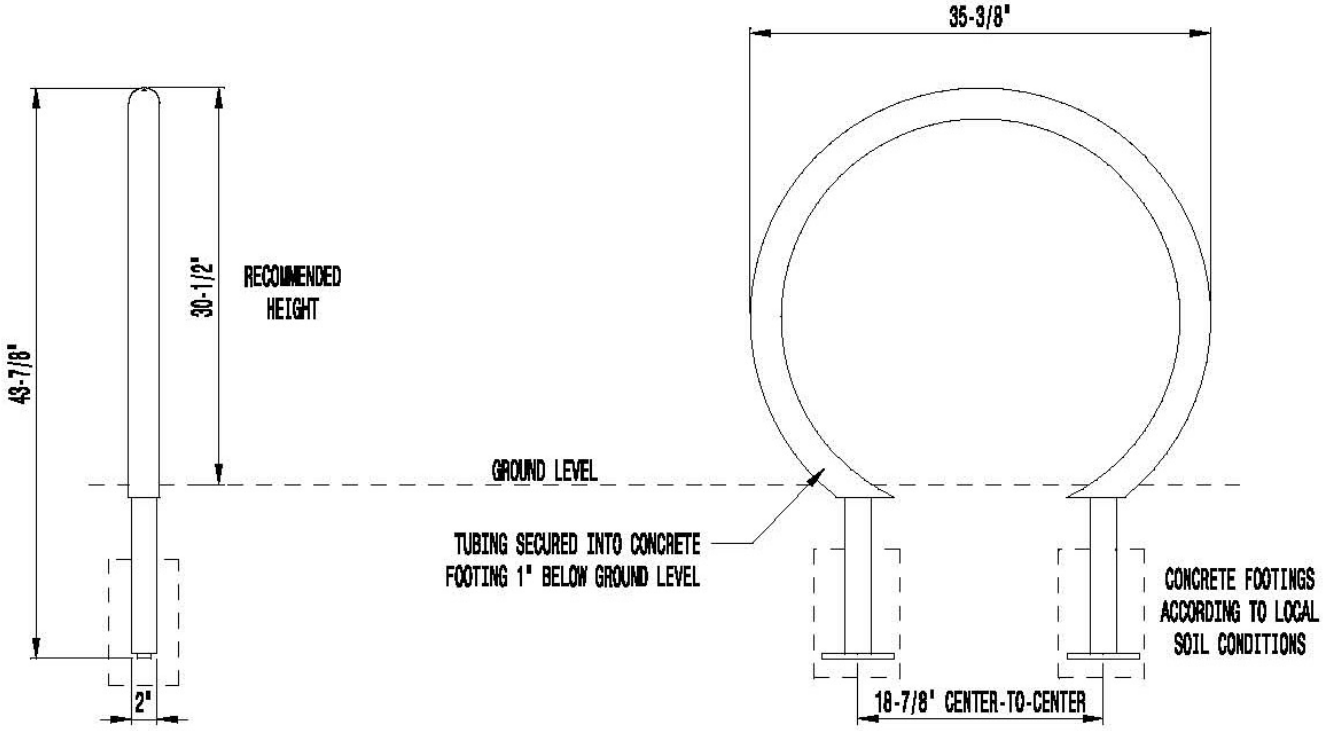

Bike Rental Stations

Zagster or approved equal
12, 10, and 6 Bike Docking Stations with Kiosk

Description:

- Install per manufacturer's recommendations.
- Install docking system on 4 inch minimum thick concrete pad.

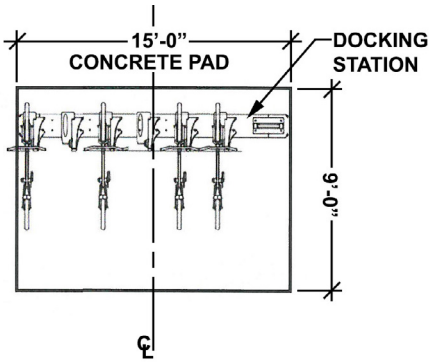

6 Bike Station Concrete Pad

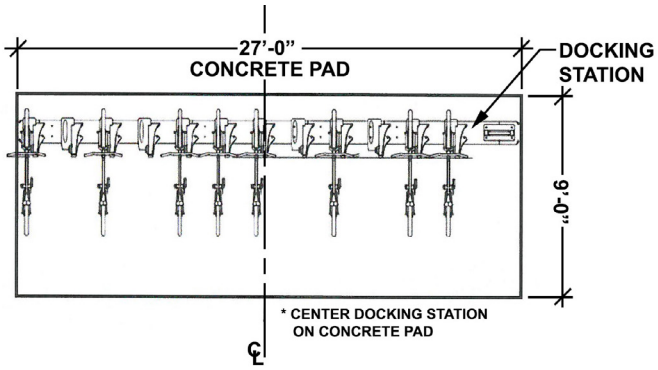

12 Bike Station Concrete Pad

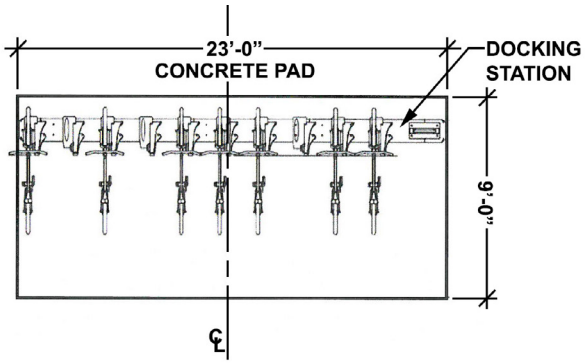

10 Bike Station Concrete Pad

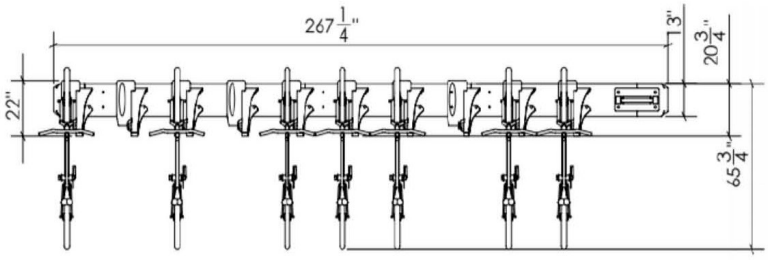

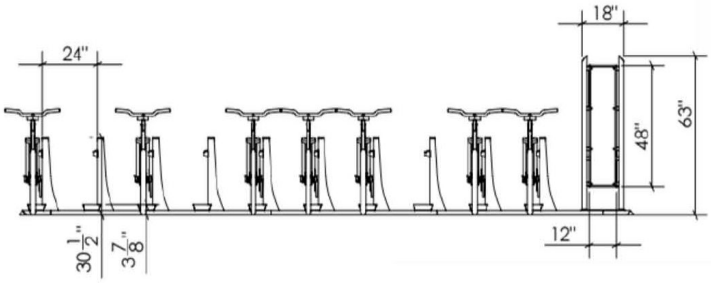

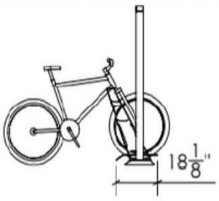

Decorative Bollard

Dumor, Inc. or approved equal
Bollard 451

Description:

- All steel members finished with black powder coat finish.
- Embedment mount required.
- Hardware (stainless steel).
- Install per manufacturer's recommendations.

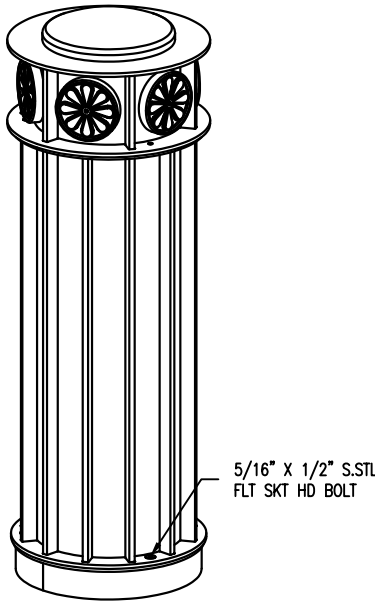

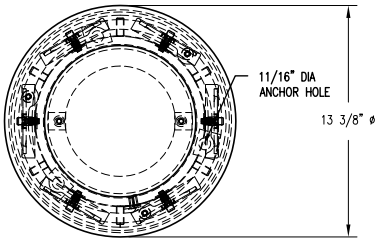

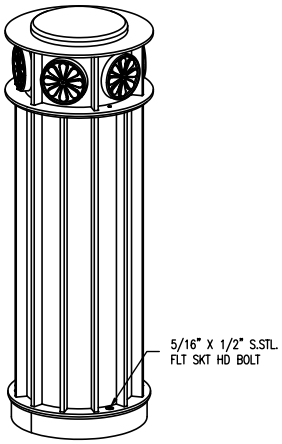

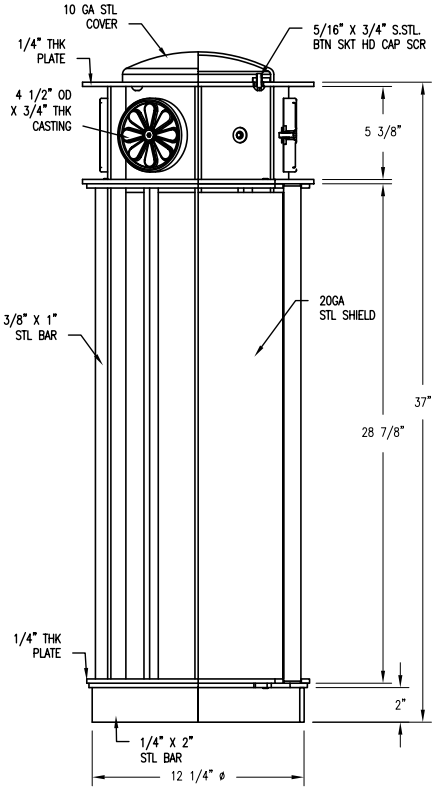

☐ S-2 SURFACE MT

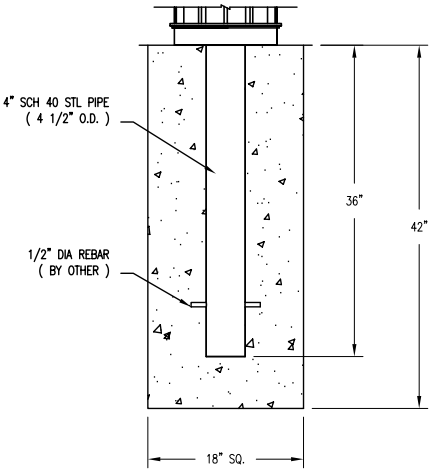

☐ S-1 EMBEDED

NOTES

1.) STL. MEMBERS COATED W/ ZINC RICH EPOXY THEN FINISHED W/ POLYESTER POWDER COATING.
2.) 1/2" X 3 3/4" EXPANSION ANCHOR BOLTS PROVIDED FOR S-2 OPTION.

Trail Bollard

TrafficGuard or approved equal
Removable Helix Locking Round Post (HL2004)

Description:

- 36” Post height, 4.5” outside diameter, 0.237 wall thickness, 40 lb. post weight.
- Ideal for emergency vehicle access.
- Completely concealed locking system.
- Flush mount when post removed.
- Hot dipped galvanized ground sleeve and filler lid piece included.
- All surfaces are primed with rust and corrosion resistant, zinc rich primer w/5,000 hour salt spray performance.
- Standard finish - high visibility safety yellow (TGIC polyester outdoor finish RAL1028 yellow). Color to be approved by TCCID
- Install per manufacturer’s recommendations.

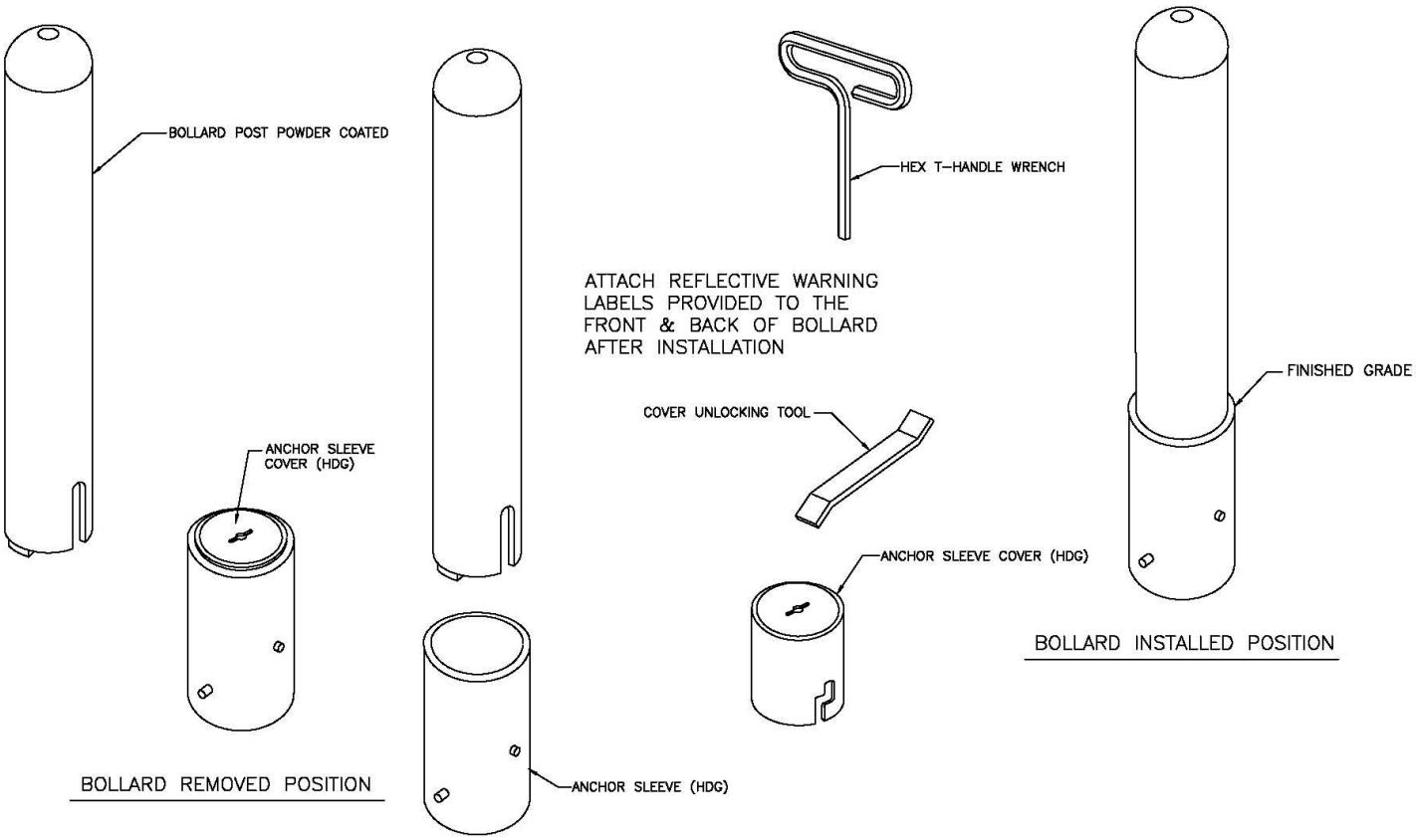

Outdoor Drinking Fountain

Elkay or approved equal
Bi-Level ADA pedestal fountain with dog bowl (LK4420DB) or without dog bowl model (LK4420FRK)

Description:

- Black powder coat finish.
- Freeze resistant.
- Vandal-resistant.
- Exterior / outdoor grade.
- ADA compliant with two bi-level stations.
- Non-refrigerated.
- Floor mount/freestanding.
- No electrical required.
- Install per manufacturer's recommendations.

Planters and Pots

Dumor, Inc. or approved equal
Planter 159

Description:

- Approximate size: 24” deight x 30” diameter width.
- Solid steel bars and bands.
- Polyethene liner.
- 11/16” anchor bolt hole with 1/2” x 3-3/4” expansion anchor bolts.
- All steel members finished with black powder coat finish.
- Hardware (stainless steel).
- Install per manufacturer’s recommendations.

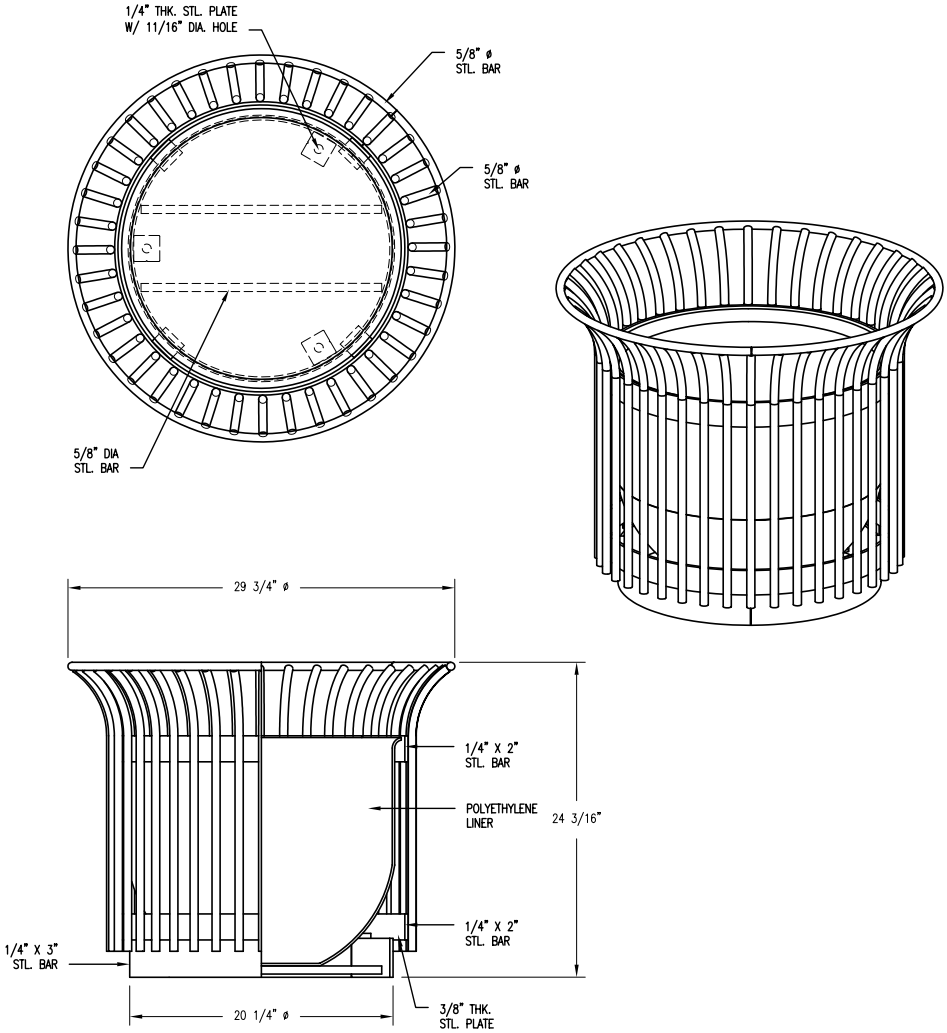

NOTES:

1.) ALL STL. MEMBERS COATED W/ ZINC RICH EPOXY THEN FINISHED W/ POLYESTER POWDER COATING.
2.) 1/2" X 3 3/4" EXPANSION ANCHOR BOLTS PROVIDED.
3.) ALL WELDS CONT. THEN GROUND SMOOTH.

Table and Chairs

Dumor or approved equal
Table and Chair 126

Description:

- Tables: 42 inch round table top; surface mount tabs with removable adjustable glides.
- All steel members finished with powder coat finish. Color to be approved by TC-CID.
- Hardware (stainless steel).
- Install per manufacturer's recommendations.

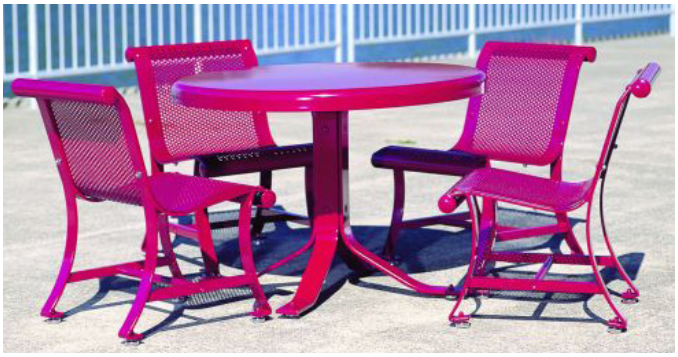

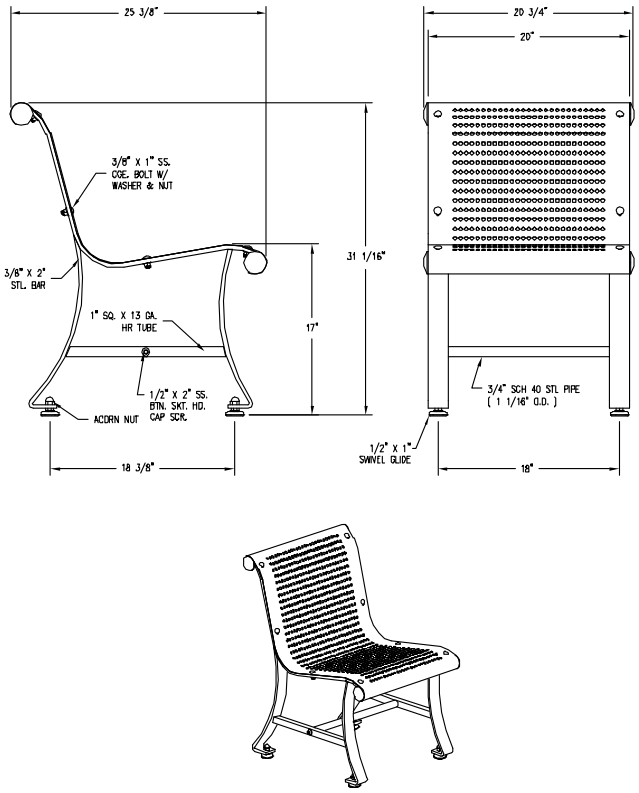

NOTES:
1.) ALL STL. MEMBERS COATED W/ ZINC RICH EPOXY THEN FINISHED W/ POLYESTER POWDER COATING.
2.) 1/2" X 1" SWIVEL GLIDES AND 1/2" X 3 3/4" EXPANSION ANCHOR BOLTS PROVIDED.

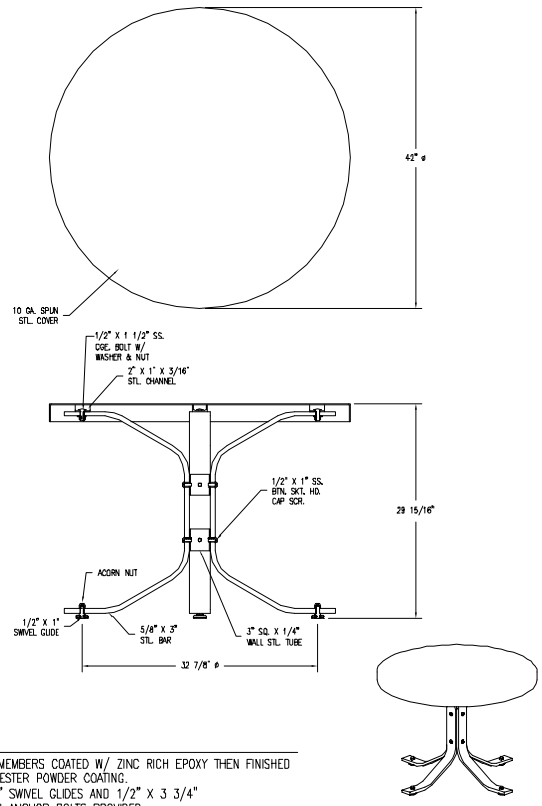

NOTES:
1.) ALL STL. MEMBERS COATED W/ ZINC RICH EPOXY THEN FINISHED W/ POLYESTER POWDER COATING.
2.) 1/2" X 1" SWIVEL GLIDES AND 1/2" X 3 3/4" EXPANSION ANCHOR BOLTS PROVIDED.

Picnic Tables

Dumor or approved equal
156 Series PL

Description:

- 6' length with aluminum frame with recycled plastic table top and seats.
- Hardware (stainless steel).
- Install per manufacturer's recommendations.

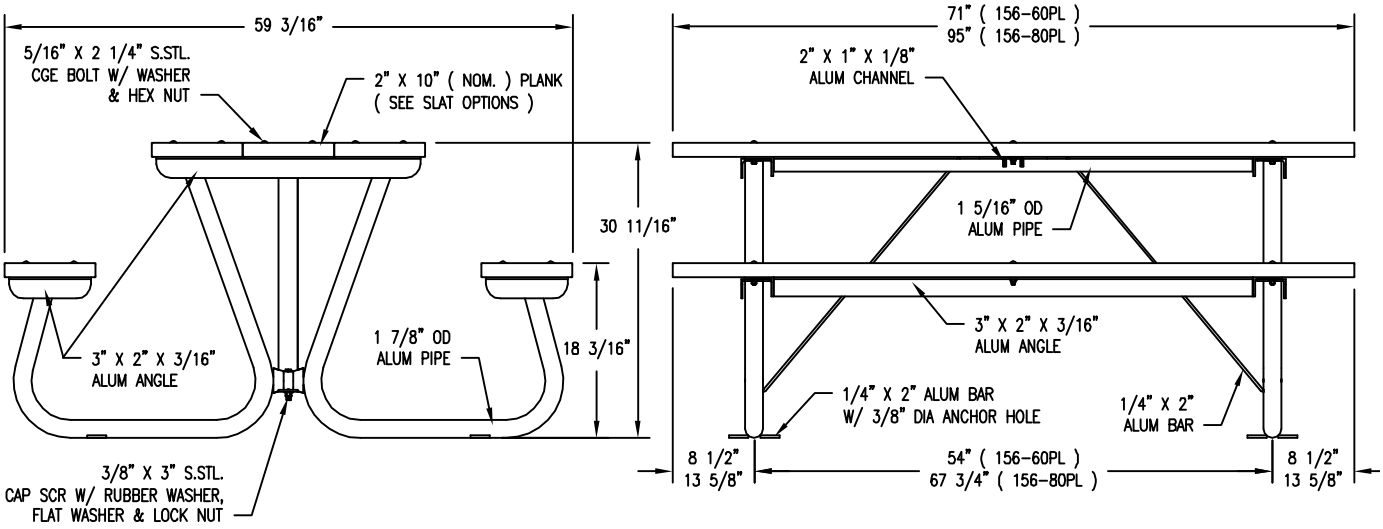

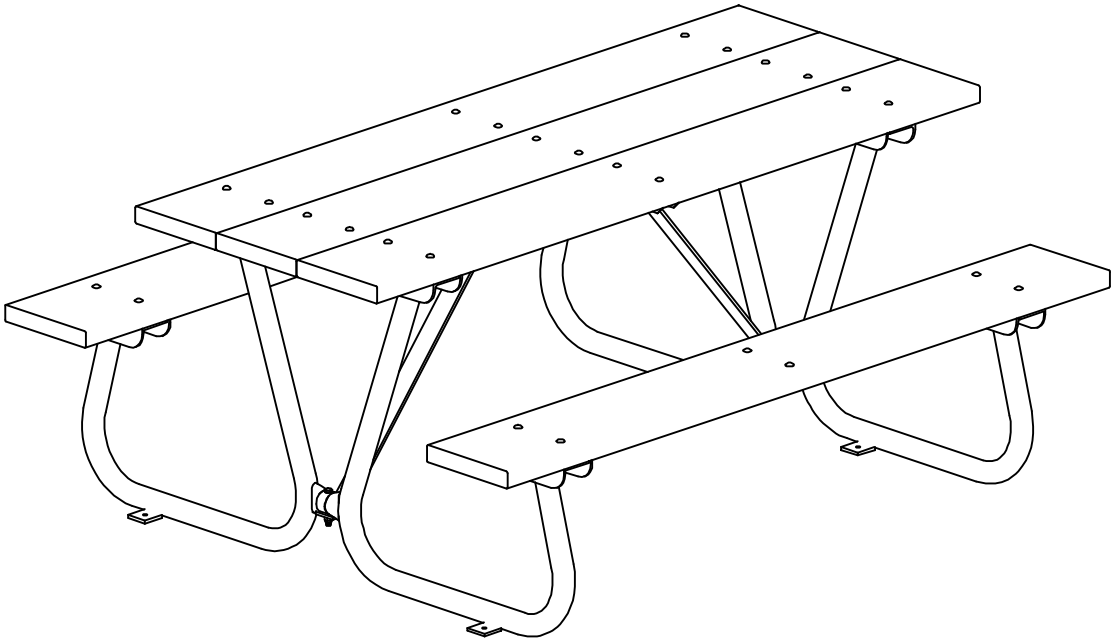

Pedestrian Scale Street Light Luminaire and Pole

Holophane or approved equal
Utility Arlington LED Series Luminaire

Description:

- Cast aluminum octagonal cover.
- 100 Watt (LED circuit board).
- Black powder coat finish.
- All exposed hardware to be stainless steel.
- Thermal resistant borosilicate glass refractor that controls the light to provide an I.E.S. Type III distribution.
- Spike finial.
- CSA listed as suitable for wet locations of 40 degrees C. ambient temperature.
- Install per manufacturer's recommendations.

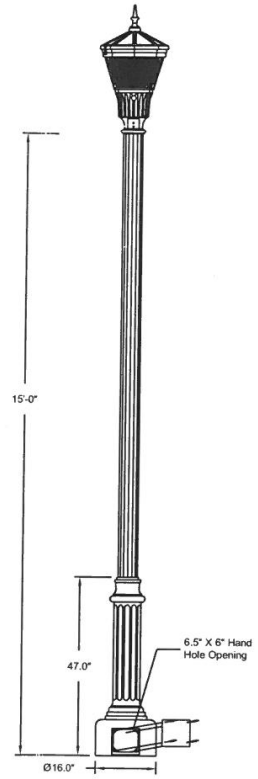

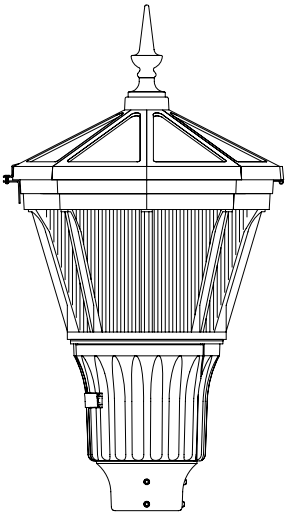

FINIALS

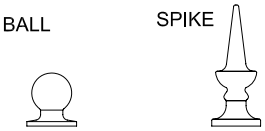

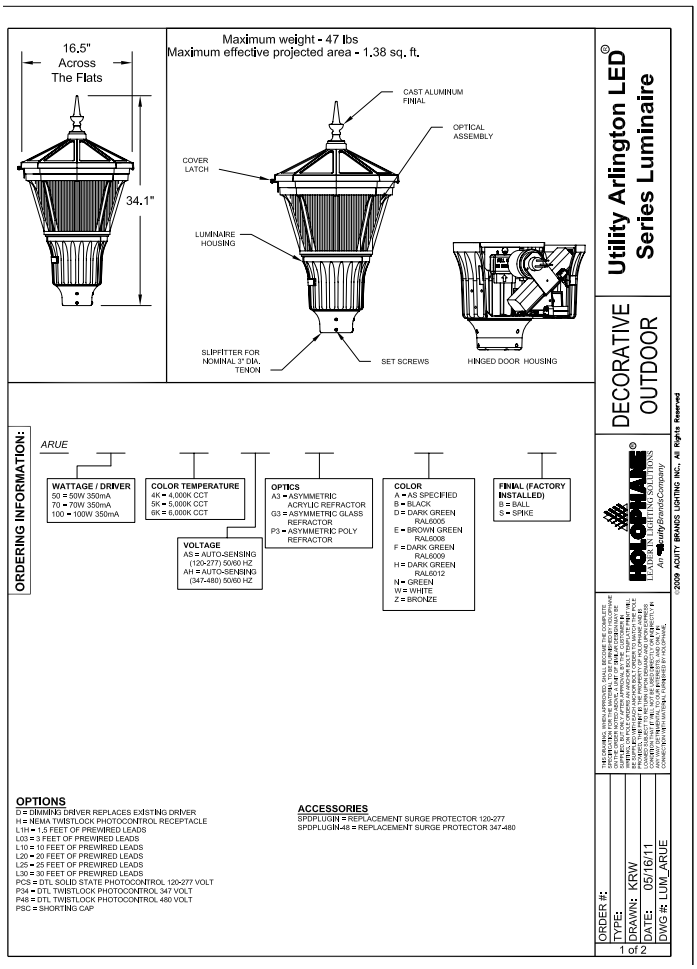

Specifications

GENERAL DESCRIPTION
The Utility Arlington LED is designed for ease of maintenance with the plug-in electrical module common to each of the luminaires in Holophane's Utility Luminaire Series. A precision optical system maximizes post spacings while maintaining uniform illumination.

OPTICAL SYSTEM
The optical system consists of a precisely molded refractor operating in conjunction with a formed polished reflector and LED circuit board with dedicated heat sink located in the top cover. Positive pressure from the reflector and gaskets at the top and bottom of the refractor create a sealed optical compartment. Refractors designed to provide an I.E.S. Type III distribution are available molded from thermal resistant borosilicate glass and acrylic or polycarbonate plastic.

LUMINAIRE HOUSING
The luminaire housing, cast of aluminum, cradles the refractor and provides an enclosure for the plug-in electrical module. A slipfitter will accept a 3" high by 2 7/8" to 3 1/8" O.D. pole tenon.

LUMINAIRE HOUSING / DOOR
Cast of aluminum, the housing / door opens without the use of tools and is retained on a hinge. For units with an E.E.I.-N.E.M.A. twist lock photocell receptacle, the door contains an acrylic "window" to allow light to reach the cell.

ELECTRICAL MODULE
The electrical components are mounted on a steel plate that is removable with minimum use of tools. A matching five conductor plug connects to the receptacle in the luminaire housing to complete the wiring. Where a starting aid is required, it is provided with a separate plug-in connector and can be replaced without the use of tools. For photoelectric operation, the electrical module is provided with an E.E.I.-N.E.M.A. twist lock photocell receptacle.

TOP COVER
The octagonal cover, cast of aluminum, is attached to the top ring of the luminaire housing by a stainless steel pins hinge and latch a color matched bracket & screw which secures entry to the LED optical chamber.

ELECTRONIC DRIVER
(Refer to the handbook for specific operating characteristics)

FINISH
The luminaire is finished with polyester powder paint to insure maximum durability.

CSA
The luminaire is CSA listed as suitable for wet locations at a maximum of 40 degrees C ambient temperature.

Vehicular Scale Street Light Luminaire and Pole

Holophane or approved equal
Memphis LED Luminaire

Description:

- "Teardrop" asymmetrical shallow skirt style luminaire.
- 150 Watt (LED driver).
- Low copper aluminumum casting with black powder coat finish.
- All exposed hardware to be stainless steel.
- Thermal resistant borosilicate glass refractor that controls the light to provide an I.E.S. asymmetric cut off distribution.
- CUL/U.L. listing suitable for wet locations up to 40 degrees C. IP rating 66.
- Install per manufacturer's recommendations.

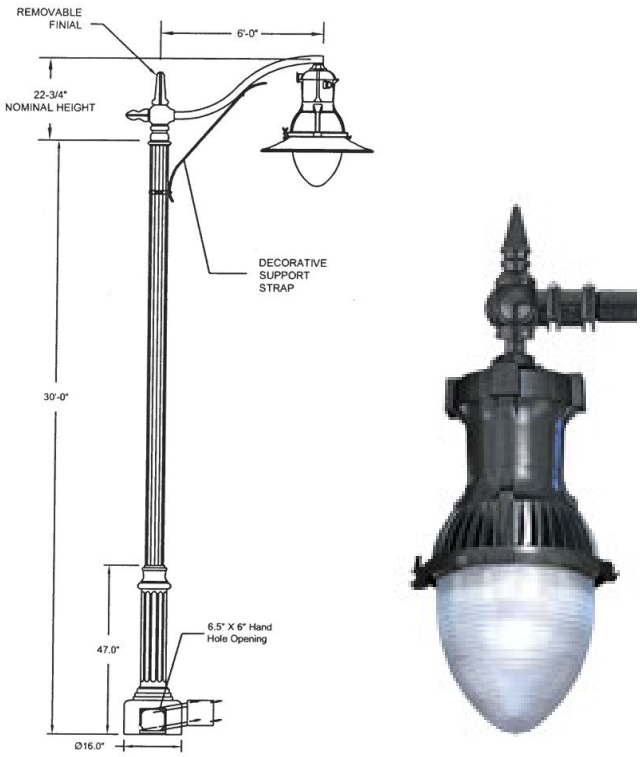

MPL - Memphis
Maximum Weight: 34.47 kg (76 lbs)
Maximum E.P.A.: 2.4 sq. ft.

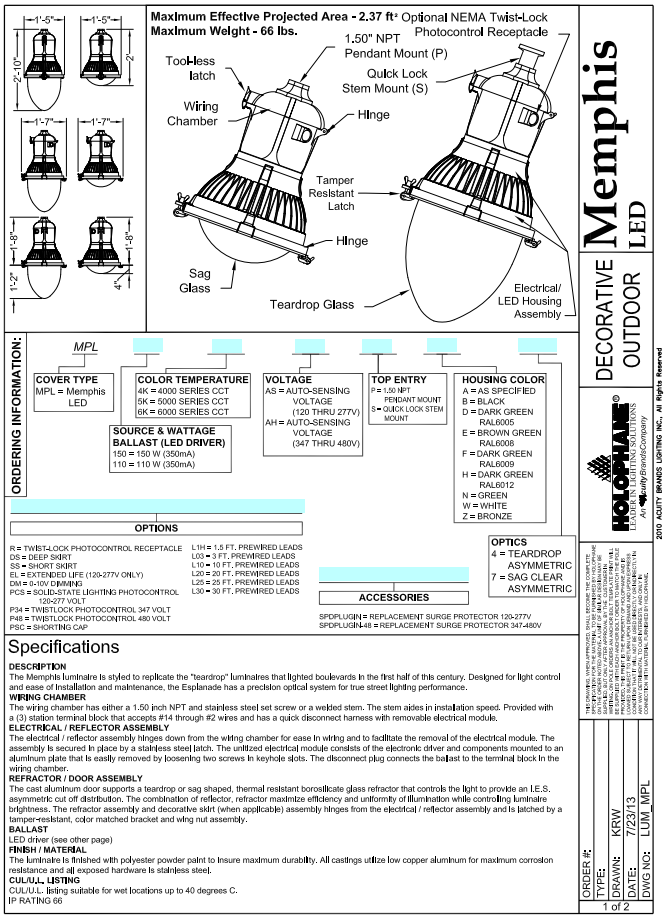

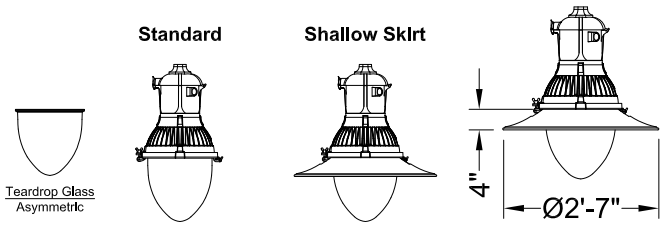

Traffic Signal Mast Arm, Light Pole, and Miscellaneous Signal Hardware

Valmont Industries, Inc.
Model No. Smooth Pole with Huntington Decorative Base Cover - Cast Aluminum Clamshell
or
Union Metal
Model No. Smooth Pole with Columbian Decorative Base Cover
or approved equal

Description:

- Ornamental base and pole top, round steel pole/shaft and curved arm.
- Black powder coat finish all equipment including but not limited to singla heads, pedetrian signal heads, pushbuttons, video detection cameras and CCTV cameras.
- Smooth poles with decorative base cover.

POLE BASE DIAMETER RANGE		DIMENSIONS OF BASE COVER		
TAPERED SMOOTH OR FLUTED STEEL & FLUTED ALUMINUM (IN)	ALUMINUM NON-TAPERED SMOOTH (IN)	DIA (IN)	HEIGHT (IN)	MODEL NUMBER
7.0 - 10.0	7.0 - 10.0	24.0	35.5	3L01EC
10.1 - 13.0	10.0 & 12.0	28.4	40.4	3L02EC
13.1 - 17.0	-	33.0	44.0	3L03EC

- Tapered smooth or fluted steel and fluted aluminum poles sized with semi-flush standard handhole, typical base plate and anchor bolts. Pole taper rate is 0.14” per foot.
- Aluminum round non-tapered dimensions sized with flush handhole and typical base plate and anchor bolts.
- Base cover heights are nominal and differ minimally with application of reducer rings. See lines below for reducer ring breaks.
- Guideline sizing is based on Valmont commercial standards. Codes and customer standards may dictate pole specifications that would affect base cover fit, to verify selection contact the factory. Retrofit of base covers require detailed information from existing installation for factory to verify proper selection. For pole sizes not listed, contact the factory.

Specialty Unit Concrete Pavers

Concrete Unit Paver
Pavestone or approved equal
City Stone Series (Tumbled style, 80 MM, Color River Red)
Install per manufacturer's recommendations.

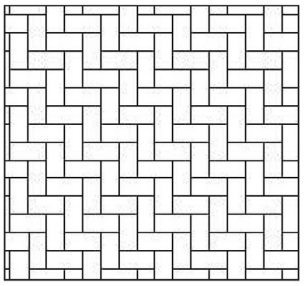

HERRINGBONE (2)

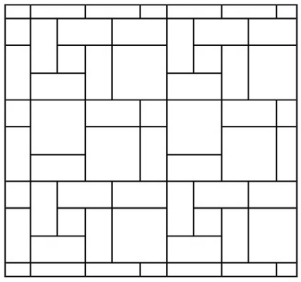

6X6, 6X12 & 12X12 RANDOM (37)

PRODUCT INFORMATION

City Stone™ Series is available in seven (7) sizes. Height/Thickness 2 3/8" = 60mm and 3 1/8 = 80mm.

City Stone™ I

Nominal Dimensions	5 13/16 W x 11 3/4" L 148mm x 298mm	
Height/Thickness:	60mm = 2 3/8"	80mm = 3 1/8"
Stones/Sq.Ft.	2.08	2.08
Wt./Stone	14 lbs.	18 lbs.
Stones/Pallet	200	160
Approx. Wt./Pallet	2,688 lbs.	2,880 lbs.
Sq. ft./Pallet	96	78
Product Number	287	289

City Stone™ II
1/2 Square & Square Bundled Together

Nominal Dimensions		
1/2 SQ.:	5 13/16 W x 2 7/8" L 148mm x 73mm	
SQ.:	5 13/16 W x 5 13/16" L 148mm x 148mm	
Height/Thickness:	60mm = 2 3/8"	
Stones/Sq.Ft.	8.42	4.12
Wt./Stone	3.5 lbs. 1/2 SQ.	6.7 lbs. SQ.
Stones/Pallet	240 1/2 SQ.	320 SQ.
Approx. Wt./Pallet	2,968 lbs.	
Sq. ft./Pallet	106	
Product Number	296	

City Stone™ II Parkway™
1/2 Square & Square Bundled Together

Nominal Dimensions		
1/2 SQ.:	5 13/16 W x 2 7/8" L 148mm x 73mm	
SQ.:	5 13/16 W x 5 13/16" L 148mm x 148mm	
Height/Thickness:	60mm = 2 3/8"	
Stones/Sq.Ft.	8.42	4.12
Wt./Stone	3.5 lbs. 1/2 SQ.	6.7 lbs. SQ.
Stones/Pallet	240 1/2 SQ.	320 SQ.
Approx. Wt./Pallet	2,968 lbs.	
Sq. ft./Pallet	106	
Product Number	291	

***City Stone™ III**

Nominal Dimensions	11 3/4 W x 11 3/4" L 298mm x 298mm	
Height/Thickness:	60mm = 2 3/8"	80mm = 3 1/8"
Stones/Sq.Ft.	1	1
Wt./Stone	27 lbs.	36 lbs.
Stones/Pallet	120	80
Approx. Wt./Pallet	3,360 lbs.	3.456 lbs.
Sq. ft./Pallet	120	96
Product Number	277	279

*Not recommended for tumbling or urban traffic. City Stone III™ does not conform with ASTM C-936 size and aspect ratio requirements.

*Fractional dimensions are nominal.

Symetry™ Square Only*

Nominal Dimensions	5 13/16 W x 5 13/16" L 148mm x 148mm	
Height/Thickness:	60mm = 2 3/8"	
Stones/Sq.Ft.	4.16	
Wt./Stone	6.7 lbs.	
Stones/Pallet	400	
Approx. Wt./Pallet	2,688 lbs.	
Sq. ft./Pallet	96	
Product Number	666	

*Coordinates with City Stone™ Series

City Stone™ II Rectangle Only

Nominal Dimensions	5 13/16 W x 8 3/4" L 148mm x 223mm	
Height/Thickness:	60mm = 2 3/8"	80mm = 3 1/8"
Stones/Sq.Ft.	2.659	2.666
Wt./Stone	11.2 lbs.	13.5 lbs.
Stones/Pallet	250	200
Approx. Wt./Pallet	2,520 lbs.	2,700
Sq. ft./Pallet	90	75
Product Number	297	298

City Stone™ II Parkway™ Rec Only

Nominal Dimensions	5 13/16 W x 8 3/4" L 148mm x 223mm
Height/Thickness:	60mm = 2 3/8"
Stones/Sq.Ft.	2.659
Wt./Stone	11.2 lbs.
Stones/Pallet	250
Approx. Wt./Pallet	2,520 lbs.
Sq. ft./Pallet	90
Product Number	292

City Stone™ IV
(also see Holland Stone IV)

Nominal Dimensions	3 7/8 W x 3 7/8" L 98mm x 98mm
Height/Thickness:	60mm = 2 3/8"
Stones/Sq.Ft.	9.32
Wt./Stone	3 lbs.
Stones/Pallet	960
Approx. Wt./Pallet	2,884 lbs.
Sq. ft./Pallet	103
Product Number	213

City Stone™ V

Nominal Dimensions	7 13/16 W x 7 13/16" L 198mm x 198mm	
Height/Thickness:	60mm = 2 3/8"	80mm = 3 1/8"
Stones/Sq.Ft.	2.33	2.3
Wt./Stone	12 lbs.	15.6 lbs.
Stones/Pallet	240	192
Approx. Wt./Pallet	2,884 lbs.	2,988 lbs.
Sq. ft./Pallet	103	83
Product Number	257	259

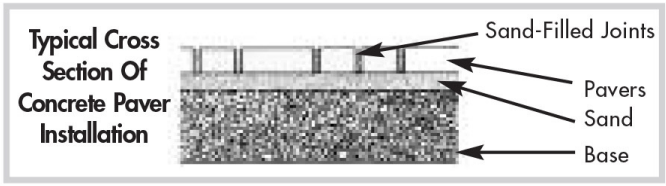

Note: Brick pavers are only allowed in the roundabout aprons and not in the travel way, sidewalks, medians, or any other areas within right-of-way.

Specialty Unit Concrete Pavers

Concrete Permeable Paver
Pavestone or approved equal
Eco Priora (Color River Red)

Concrete Detectable Warning Paver
Hanover Architectural Products or approved equal
Detectable Warning Paver (Size 24”x24”)

Eco Priora Permeable Paver

Stocked Sizes	Stocked Colors
11 3/4" x 11 3/4" x 2" (297mm x 297mm x 51mm)	Red 15
23 1/2" x 23 1/2" x 2" (597mm x 597mm x 51mm)	Charcoal Yellow (M1517)
Please Note: Other sizes and colors are available upon request when quantities permit. Contact a Hanover® Representative for more information.	

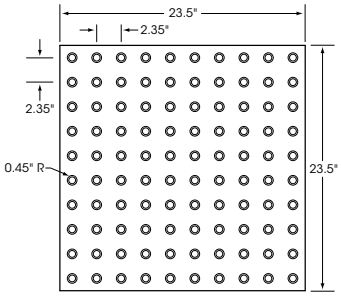

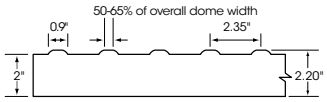

These drawings give the dimensions of the truncated domes. Please note that the standard thickness of the paver does not include the height of the dome. A paver which is ordered at a 2" thickness will actually measure 2.20" from the bottom of the paver to the top of the dome.

Detectable Warning Paver

PRODUCT INFORMATION

Eco-Priora™ is available in one size. Height = 80mm

ECO-PRIORA™
(120mm x 240mm)

Eco-Priora™

Dimensions: **4 3/4" W x 9 7/16" L x 3 1/8" H**

Wt./Stone:	11.5 lbs.
Stones/Pallet:	280
Approx. Wt./Pallet:	3,255 lbs.
Sq. Ft./Pallet:	88
Product Number:	699

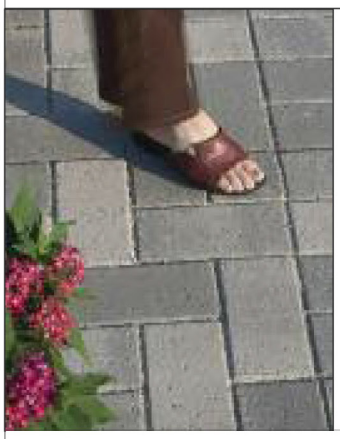

INSTALLATION PATTERN

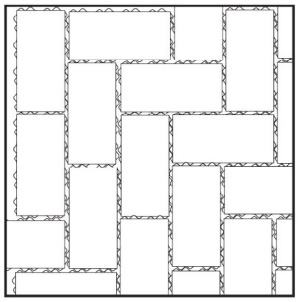

PERMEABLE PAVERS TREATMENT

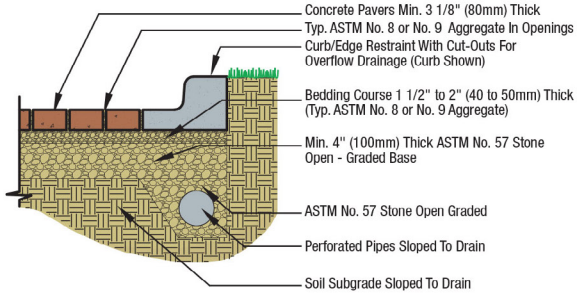

PERMEABLE PAVERS TREATMENT AND DETENTION

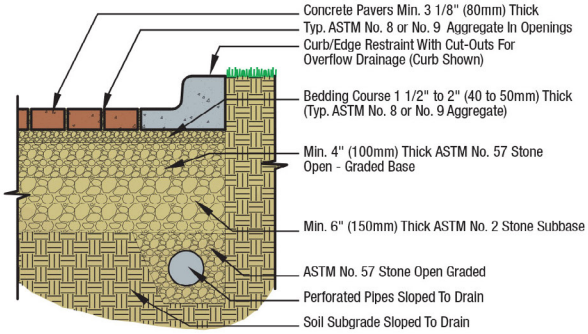

Note: Brick pavers are only allowed in the roundabout aprons and not in the travel way, sidewalks, medians, or any other areas within right-of-way.

Specialty Unit Clay Pavers

Clay Unit Paver
Pine Hall Brick or approved equal
Beveled Edge Pavers (English Edge Series)
Pedestrian Traffic Size: 2-1/4" x 4" x 8"
Vehicular Traffic Size: 2-3/4" x 4" x 8"

Clay Permeable Paver:
Pine Hall Brick or approved equal
StormPave (ADA compliant)

Acceptable paving pattern for vehicular traffic: Herringbone pattern oriented at 45 degrees or 90 degrees to the direction of traffic.
Acceptable paving pattern for pedestrian traffic: Running Bond, Basketweave and Herringbone

Natural Stone Pavers

Granite Pavers
Consistent dimensional sized granite cobblestones.

Note: Brick pavers are only allowed in the roundabout aprons and not in the travel way, sidewalks, medians, or any other areas within right-of-way.

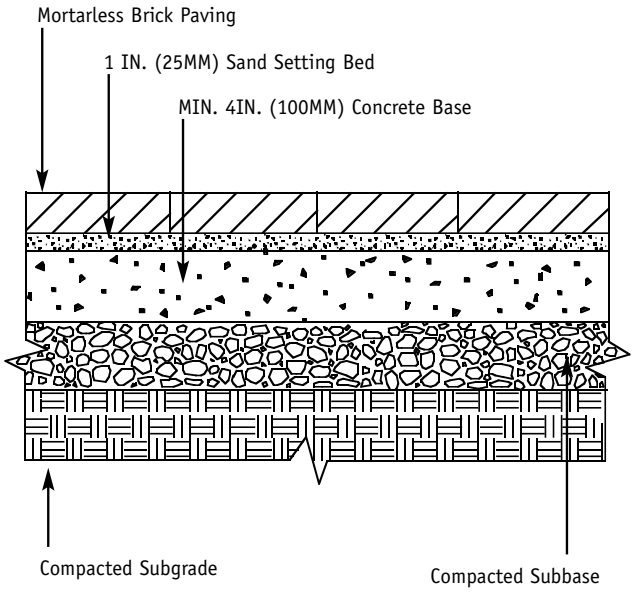

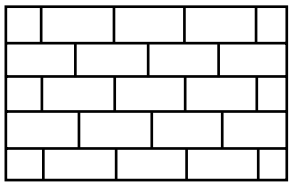

Running Bond

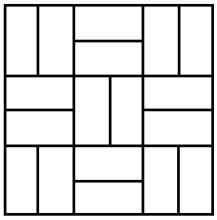

Basketweave

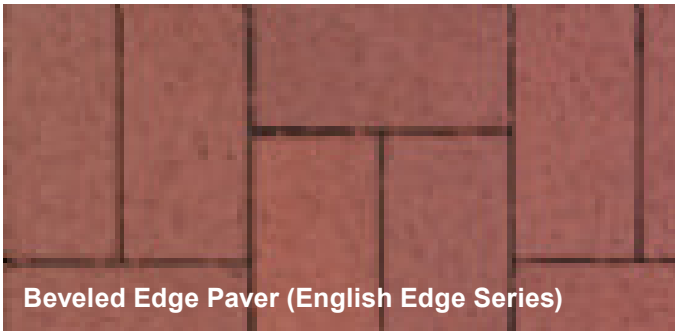

Beveled Edge Paver (English Edge Series)

StormPave Permeable Paver

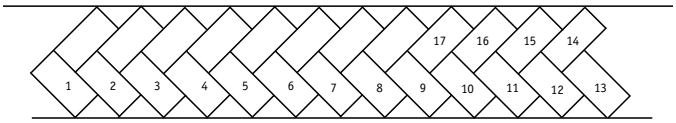

45 Degree Herringbone Installation Pattern

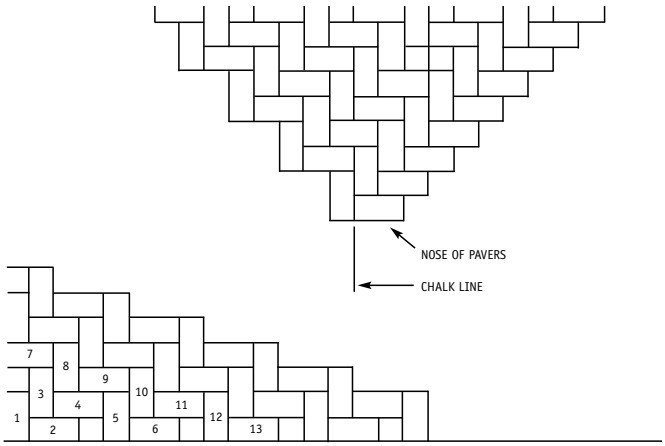

90 Degree Herringbone Installation Pattern

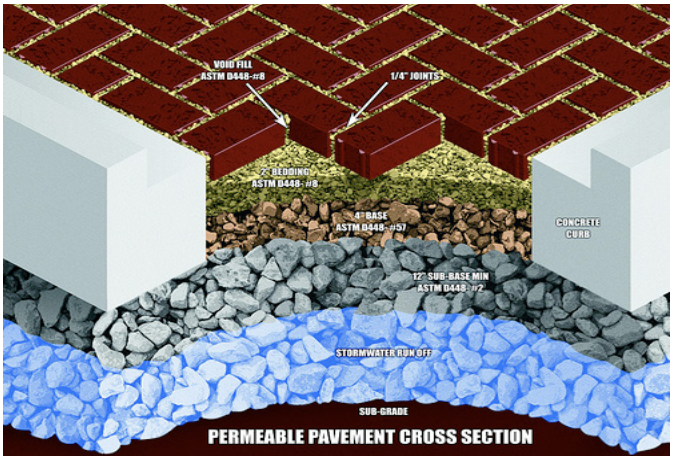

Roundabout Apron Detail

Description:

- Pavestone pavers (80 MM) min, thickness, Color: river red.
- Pattern: 45 degree herringbone.
- 6 Inch width concrete banding/curb.
- Install per detail and notes.

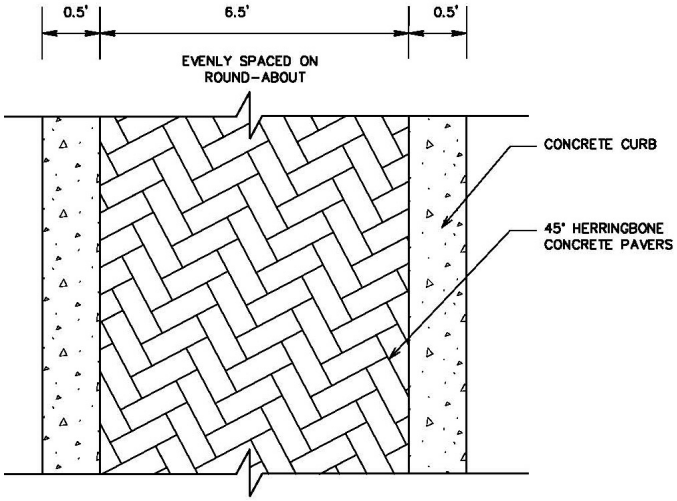

ROUND-ABOUT PLAN VIEW
NTS

Note: Brick pavers are only allowed in the roundabout aprons and not in the travel way, sidewalks, medians, or any other areas within right-of-way.

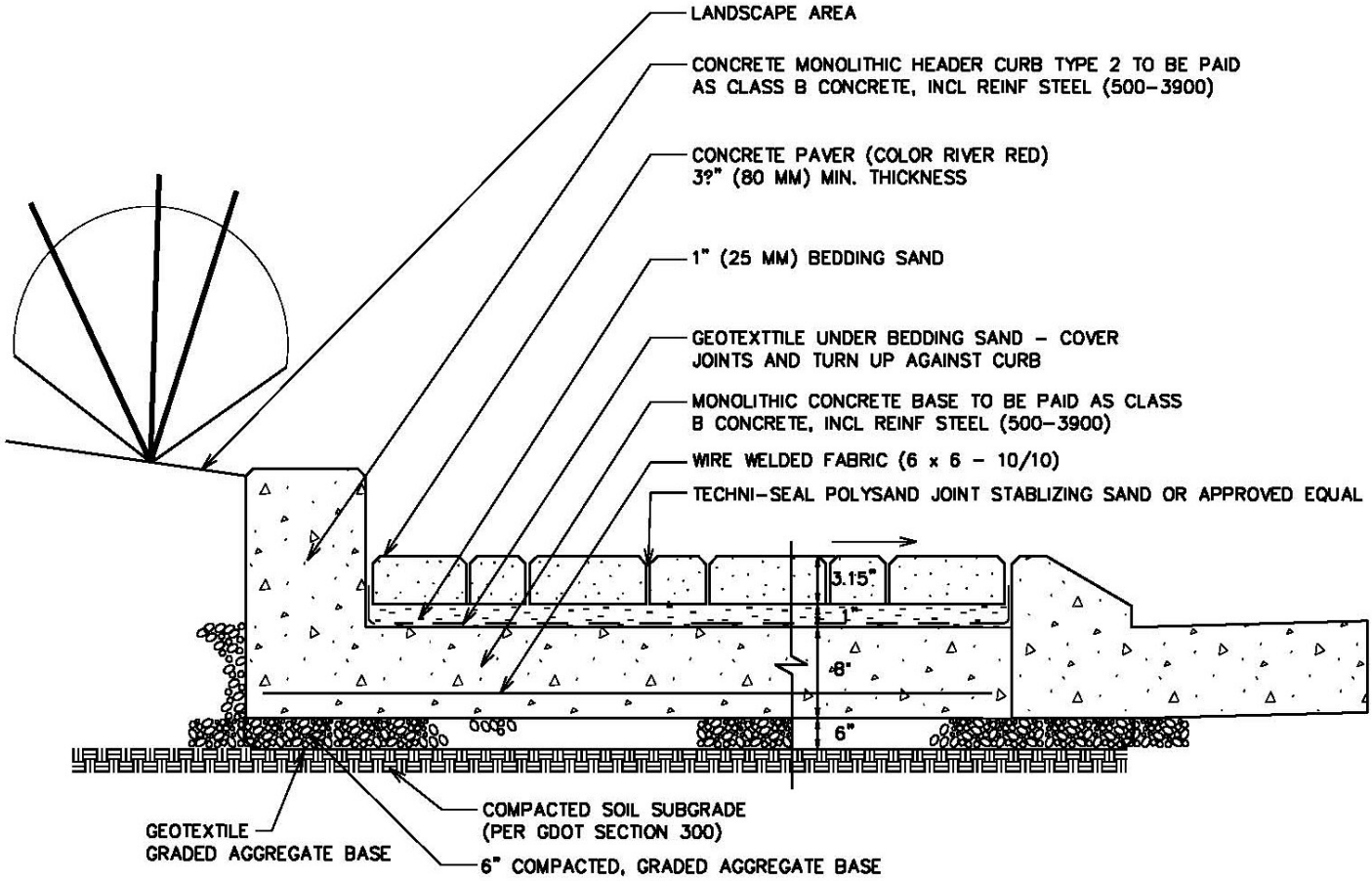

NOTE: CONCRETE PAVERS TO BE INSTALLED FLUSH WITH ADJACENT CURBING, EXCEPT AS DIRECTED BY ENGINEER TO SMOOTH OUT IRREGULARITIES.

ROUND-ABOUT APRON ON CONCRETE BASE
NTS

Restroom Facility

Cobb County Parks and Recreation Standard

Description:

- 2 Women's stalls with 2 sinks.
- 2 Men's stalls and 1 urinal with 2 sinks.
- 1 Family restroom with 2 sinks.
- Drinking fountain (attached to building).
- Storage/utility/maintenance room.

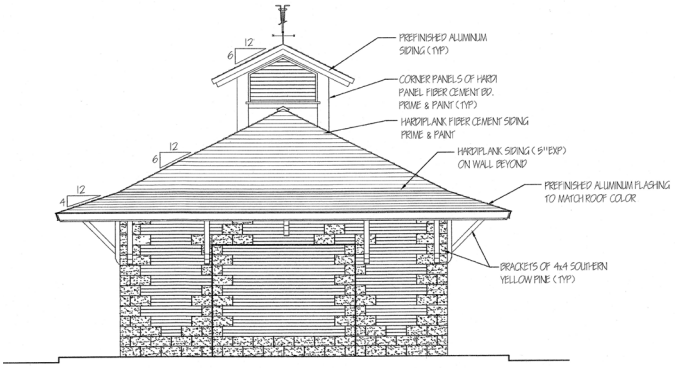

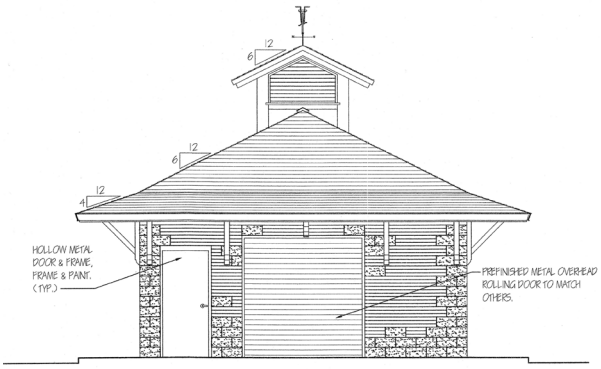

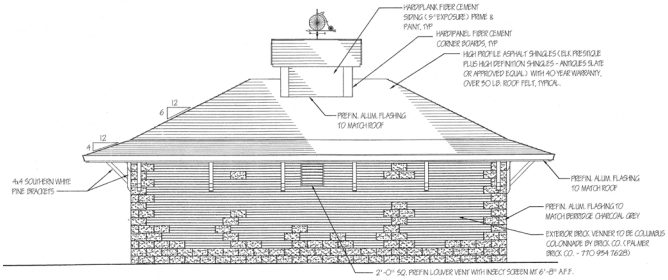

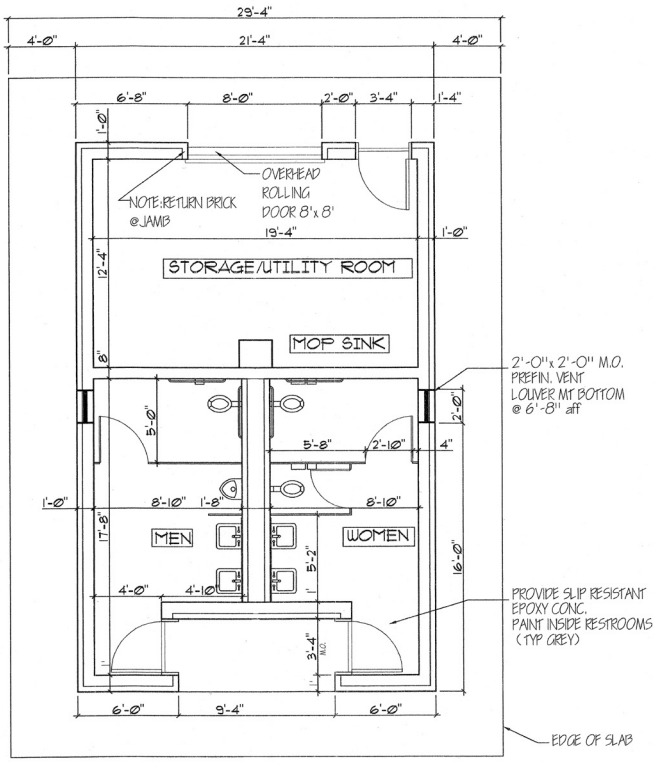

FLOOR PLAN

Playground Equipment and Surfacing

Playground Equipment

GameTime or approved equal
(Custom themed playground structures as appropriate for areas, example: Plane theme).

Playground Surfacing

GameTime or approved equal
Poured in Place Rubber: (Aliphatic) shall match theming of playground structures. example: planed theme with airport markings, control tower, etc...).

Description:

- Various playground structures suited for appropriate age groups.
- All playground equipment shall be approved by TCCID.
- Install per manufacturer's recommendations.

Pavilion and Shade Structures

Poligon or approved equal
Carmel (eight sided clerestory gazebo, hip roof).

Description:

- Metal structure with stone columns.
- Eight sided octagon shape with decorative clerestory.
- Concrete pad, or decorative pavers/stone set on concrete subbase.
- Metal roof type, (multi rib or standing seam).
- 2x6 Tongue and groove interior roof with weather resistant finish.
- Steel columns with granite stone base (Stone to match TCCID standard).
- Steel members to have black powder coat finish.
- Decorative cupola.
- Electrical to be provided with outlets, lighting, and outdoor ceiling fans.
- Railing required as necessary to meet County Code.
- Gutters to be provided and tied to existing storm drainage system.
- Install per manufacturer's recommendations.

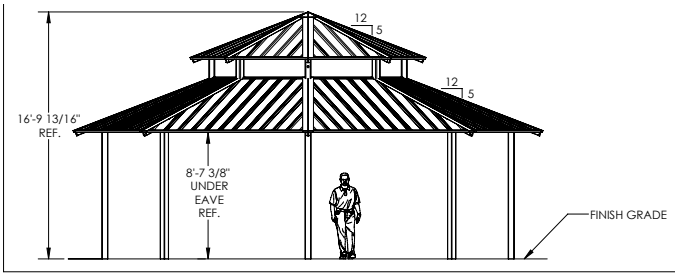

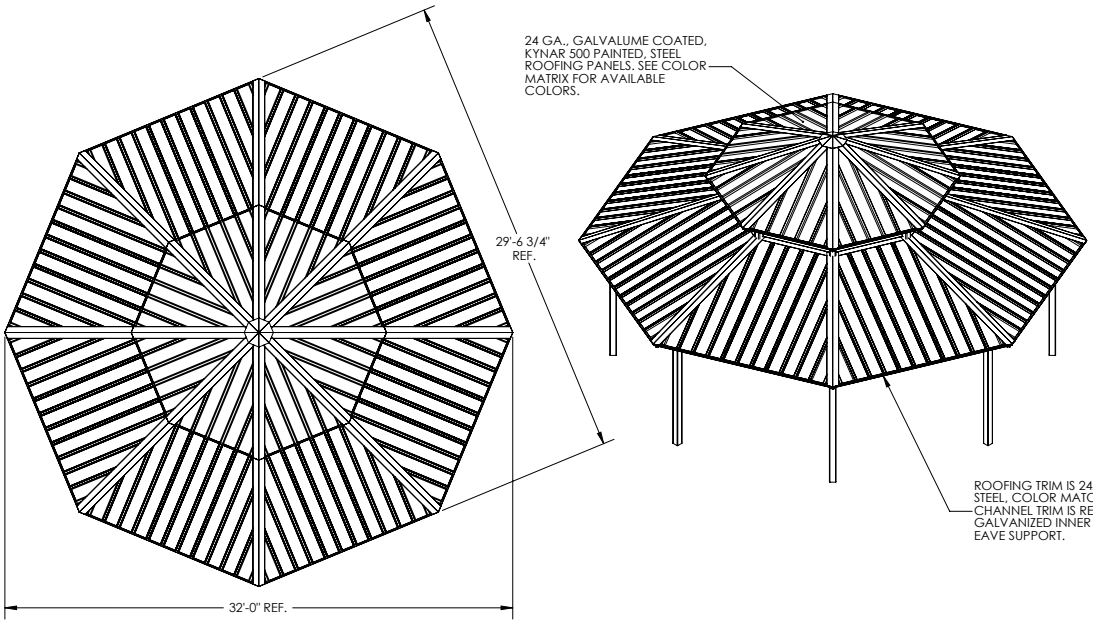

NOTE: THIS IS A

PLANNING LEVEL DRAWING.

THE STRUCTURE SHOWN IS SUBJECT TO ON-GOING DESIGN REVIEW AND UPDATE. EXPECT SOME CHANGES TO MATERIAL SIZES AND GENERAL DIMENSIONS. ONLY USE DRAWINGS PROVIDED WITH ENGINEERED STRUCTURES FOR CONSTRUCTION.

SEE FINISHES / ROOFING PAGE FOR:

- FRAME FINISH OPTIONS
- POWDER COAT AND ROOFING COLOR SELECTION
- TONGUE & GROOVE, STRUCTURAL INSULATED PANEL AND METAL ROOF OPTIONS
- OTHER ROOFING OPTIONS

SEE ORNAMENTATION PAGE FOR:

- ORNAMENTATION PATTERNS
- RAILING PATTERNS
- COLUMN OPTIONS
- CUPOLA OPTIONS

THIS SHELTER PROVIDES 724 SQ. FT. OF SHADE.

Bus and Transit Shelter

Brasco International or approved equal
Interlude Model

Description:

- Aluminum structure.
- Cantilevered roof with “I” beam and turn-buckle detail.
- Hurricane rated wind loads.
- 7 foot shade canopy.
- Traffic black powder coat finish.
- Arched roof with 16mm polycarbonate.
- Include bench, trash receptacle, solar powered security lighting, display case for schedule or map.
- Size and configuration shall be determined by site location and approved by the TCCID.
- Install per manufacturer’s recommendations.

SPECIFICATIONS AS SHOWN:
- $\frac{1}{4}$" GLAZING
- BLADE RAFTER ROOF ASSEMBLY
- ADA COMPLIANT INTERLUDE BENCH
- INTERLUDE STYLE SHELTER 4 PIECE WLEDED "I" BEAM COLUMNS

MODEL #	DEPTH	LENGTH
INT04XX	4'	5', 10', 15', 20'
INT05XX	5'	5', 10', 15', 20'
INT07XX	7'	5', 10', 15', 20'

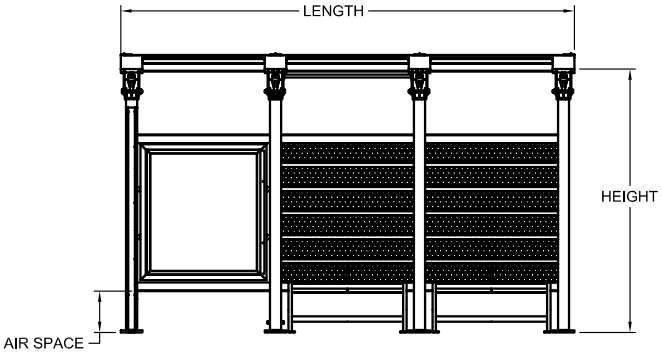

FRONT ELEVATION

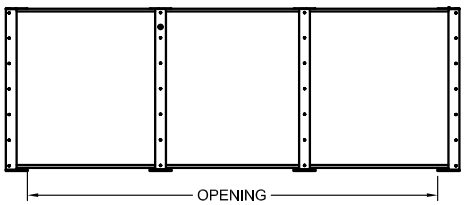

PLAN VIEW

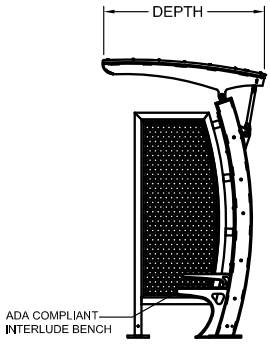

SIDE ELEVATION

Ornamental Fencing

Ameristar Fence or approved equal
Echelon Plus (Ornamental aluminum fence and gate)
Style: Majestic

Description:

- 4' Height recommended areound playground areas (5' or 6' Height may be used in certain applications if approved by TCCID).
- Smooth top rail.
- Reinforced posts.
- 3/4 inch pickets.
- 2-3 rail configuration.
- Color and finish: black powder coat finish.
- Install per manufacturer's recommendations.

Note: All fences and other items placed within roadway clear zones should be breakaway approved. These items should be located outside of sight distance triangles, unless determined not to restrict motorists' sight.

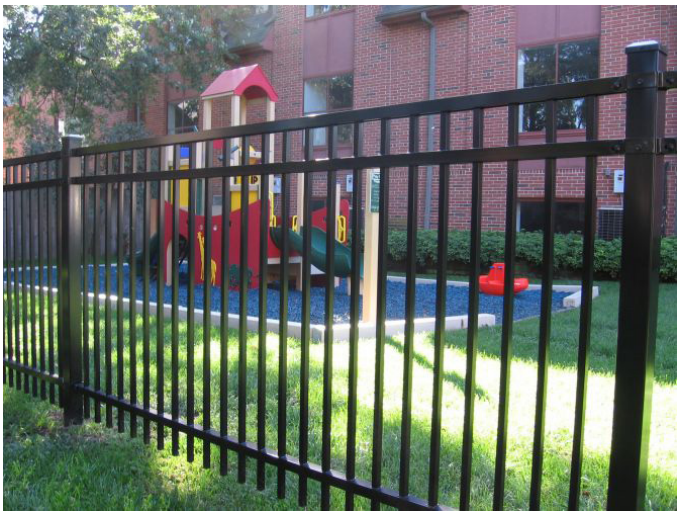

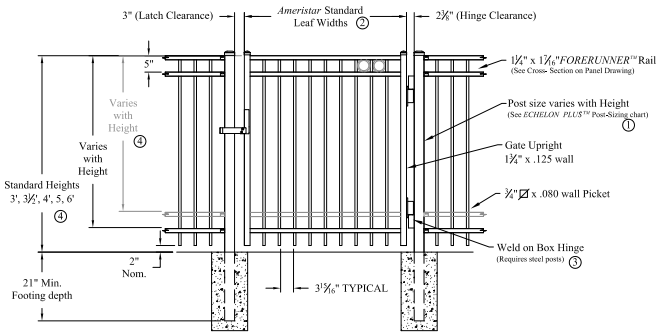

Single gate Arrangement

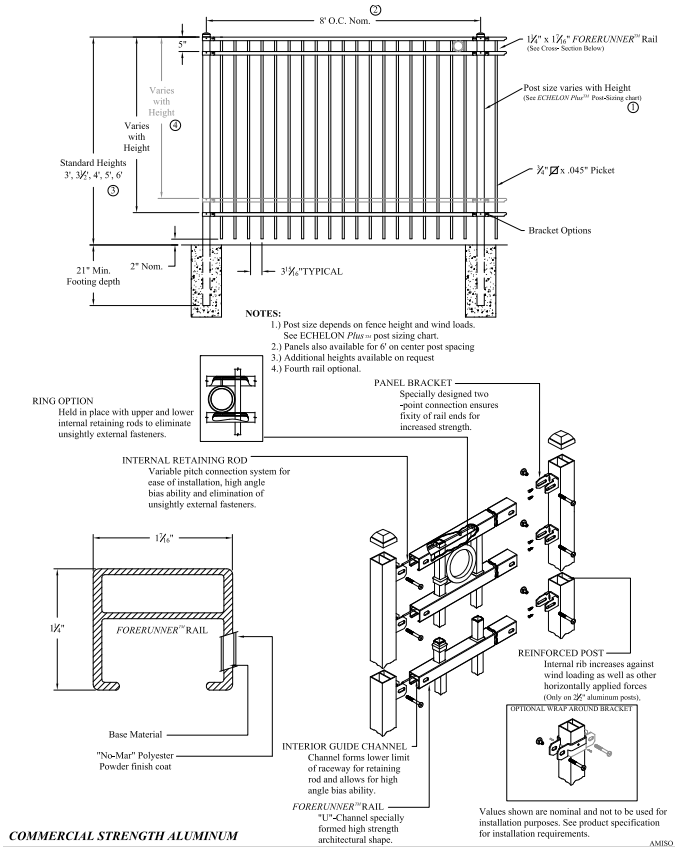

Privacy Wood Fencing

Walpole Woodworkers or approved equal
Solid Cellular Vinyl or Cedar Privacy Fence

Description:

- 6' Height recommended areound playground areas (8' Height may be used in certain applications if approved by TCCID).
- 6"x6" or 8"x8" Posts. Top of post to have beveled edge.
- Smooth shiplap V-groove boards.
- Top, middle, and bottom rail.
- Hardware (stainless steel).
- Color and finish: color shall be approved by TCCID. Weather resistant opaque stains shall be used for the finish.
- Install per manufacturer's recommendations.

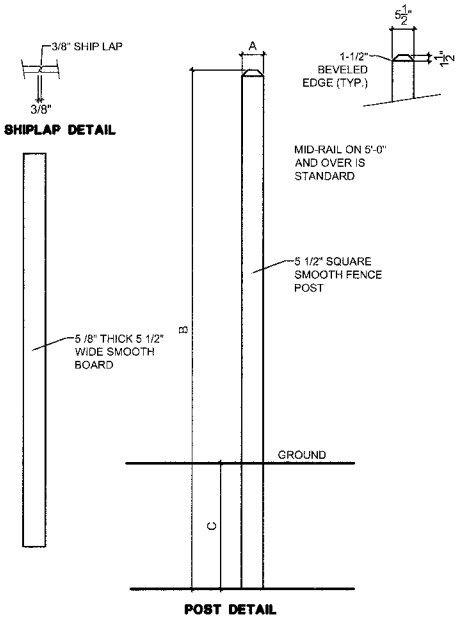

Note: All fences and other items placed within roadway clear zones should be breakaway approved. These items should be located outside of sight distance triangles, unless determined not to restrict motorists' sight.

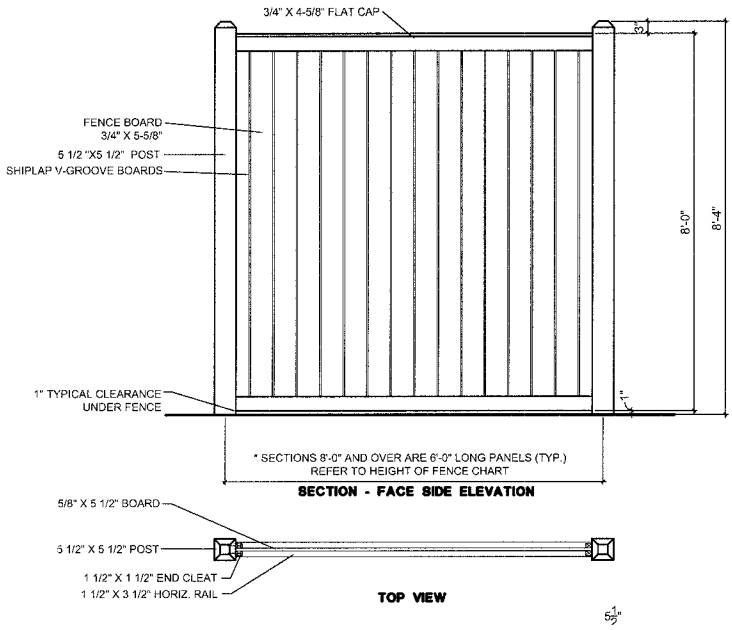

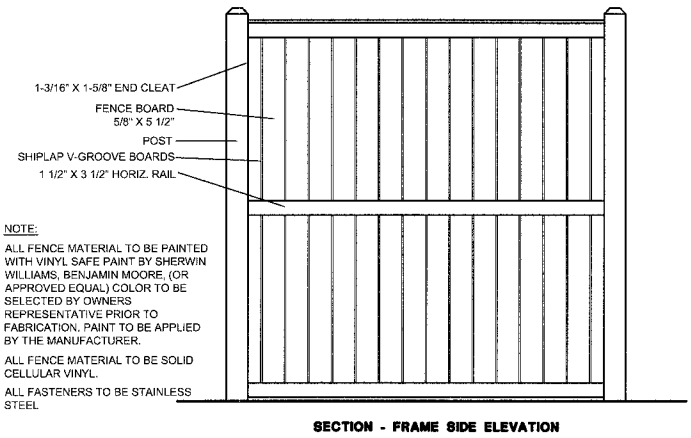

HEIGHT OF FENCE (FEET)

	3'	3'-1/2"	4'	5'	6'	6'-1/2"	8" *	10" *	
A	5-1/2	5-1/2	5-1/2	5-1/2	5-1/2	5-1/2	5-1/2	5-1/2	INCHES
B	66	72	84	96	108	114	132	156	
C	26	26	32	32	32	32	32	32	

* SECTIONS 8'-0" AND OVER ARE 6'-0" LONG PANELS (TYP.)

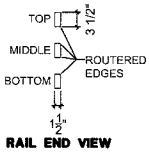

Trail Railing

Cobb County Standard

Description:

- 4” X 4” X 1/4” Galvanized posts.
- Pressure treated 2 x 6 rails.
- Galvanized hardware.
- Install per detail and notes.

GENERAL NOTES

STRUCTURAL STEEL - ALL STEEL TUBES, PIPES, ANGLES AND PLATES SHALL BE ASTM A709, GR 36 GALVANIZED.

STEEL CONNECTING PLATES - STEEL CONNECTING PLATES SHALL BE ASTM A709 GR 36. HOLES IN STEEL PLATES FORMING A PAIR (1 PLATE FOR EACH SIDE) SHALL BE MATCHED. HOLES SHALL BE 1/16" LARGER (MAXIMUM) THAN THE BOLT. BOLTS SHALL BE SQUARE HEAD MACHINE BOLTS WITH SQUARE NUTS.

FRAMING LUMBER - FRAMING LUMBER SHALL BE CUT ACCURATELY AND FIT PROPERLY IN POSITION, TRUE TO LINES, PLUMB, LEVEL, AND RIGIDLY SECURE IN POSITION.

BOLTS, NUTS, AND LAG SCREWS SHALL BE TURNED TIGHT AT TIME OF INSTALLATION AND AGAIN JUST BEFORE BEING ENCLOSED WITH OTHER MATERIALS OR AT COMPLETION OF WORK. BOLTED CONNECTIONS IN WOOD SHALL CONSIST OF ONE WASHER AT EACH END AND ONE NUT. LAG SCREWS SHALL HAVE A WASHER WHERE BEARING AGAINST WOOD.

ALL BOLTS, NUTS, WASHERS, SCREWS AND NAILS SHALL BE GALVANIZED UNLESS NOTED OTHERWISE.

HOLES THROUGH LUMBER SHALL BE 1/16" DIAM. LARGER THAN BOLT. LEAD HOLES FOR LAG SCREWS SHALL BE SIZED ACCORDING TO N.F.P.A. STANDARD PRACTICE.

LUMBER- ALL LUMBER SHALL BE CUT TO THE NOMINAL SIZE SHOWN ON THE PLANS AND DRESSED (S4S). ALL LUMBER SHALL BE SOUTHERN YELLOW PINE. LUMBER SHALL BE AIR DRYED TO A MAXIMUM MOISTURE CONTENT OF 19% PRIOR TO PRESSURE TREATING. QUANTITIES FOR LUMBER ARE BASED ON IN-PLACE VOLUME AND DO NOT INCLUDE WASTE OR DROPS.

TREATMENT - LUMBER SHALL BE PRESSURE TREATED WITH PENTACHLOROPHENOL. WHERE LUMBER THICKNESS IS 2" OR LESS, IT WILL NOT BE NECCESARY TO RE-TREAT CUTS OR DRILLED HOLES.

PENTA PRESSURE TREATMENT SHALL BE DONE IN AN EMPTY CELL PROCESS WITH PENTACHLOROPHENOL CONFORMING TO AWPA STANDARD P8 IN HYDROCARBON SOLVENT, TYPE A, CONFORMING TO AWPA STANDARD P9 TO A MINIMUM NET RETENTION OF 0.60 PCF IN ACCORDANCE WITH AWPA STANDARD C28.

PAYMENT- ALL COSTS ASSOCIATED WITH WOOD FENCE INCLUDING, BUT NOT LIMITED TO HANDRAIL MATERIALS, PAINTING, FOOTINGS AND INSTALLATION SHALL BE INCULDED IN THE OVERALL BID PRICE FOR THE HANDRAIL.

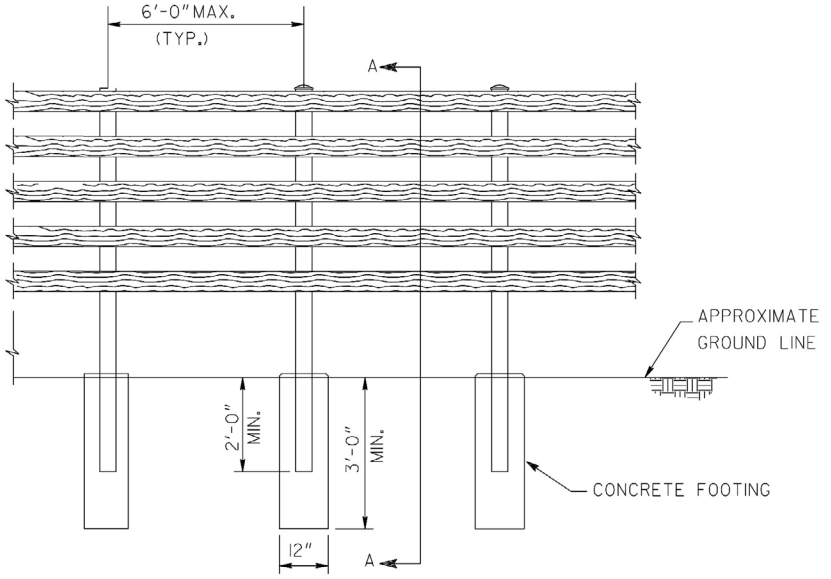

ELEVATION OF HANDRAIL

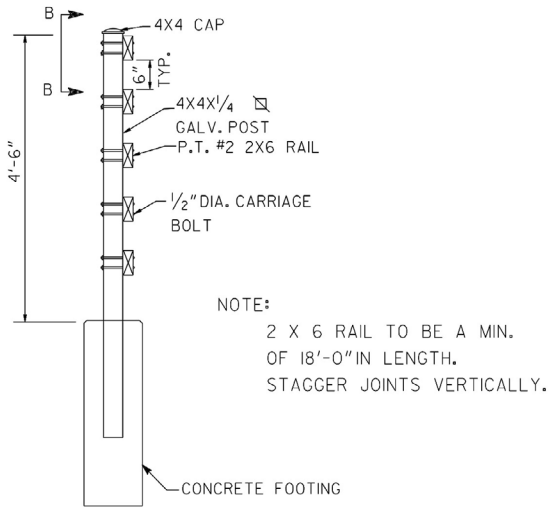

SECTION A-A

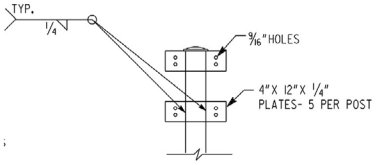

SECTION B-B

Note: All fences and other items placed within roadway clear zones should be breakaway approved. These items should be located outside of sight distance triangles, unless determined not to restrict motorists' sight.

Gateway Monuments

Stone Monument with Graphic Panel

Description:

- Overall height - 20’-3”.
- Base of monument (3”-5” thick fieldstone ashlar -TN) from Stone Distributors, 1675 Bells Ferry Rd., Marietta, Ga 30066. Contact: Michael Lehman #678-354-0566.
- Top of monument (savannah grey stone from Willis Dimensions Stone. Elberton, GA Contact: Dale Willis #706-213-8031.
- Color samples and mock shall be provided prior to construction.
- Note: Gateway Monuments should be placed outside of the clear zones.

Colors & Finishes

Colors shown here may not exactly match manufacturers color chart swatch or actual sample. Client to either provide samples or specifications for custom colors prior to production or approve color samples or color specifications

- C-1 Black (SG)
- C-2 Matthews Brushed Aluminum (HG)
- C-3 Savannah Grey
- C-4 3"-5" thick fieldstone Ashlar (TN)
- C-5 PMS 7658 Akzo w/metal fleck High Gloss

Construction Specifications

- A **Base of monument** to be 3"-5" thick fieldstone Ashlar(TN) from Stone Distributors, 1675 Bells Ferry Rd, Marietta Ga 30066. Contact: Michael Lehman #678-354-0566.
- B **Top of monument** to be Savannah Grey stone from Willis Dimensions Stone. Elberton, Ga Contact: Dale Willis #706-213-8031
- C 1/4” Aluminum Panel
- D Existing Wall
- E Concrete Spread Footer with #5 rebar
- F 6” Long Studs (3” in Column & 3” Float)
- G 1/4” Thick Studs

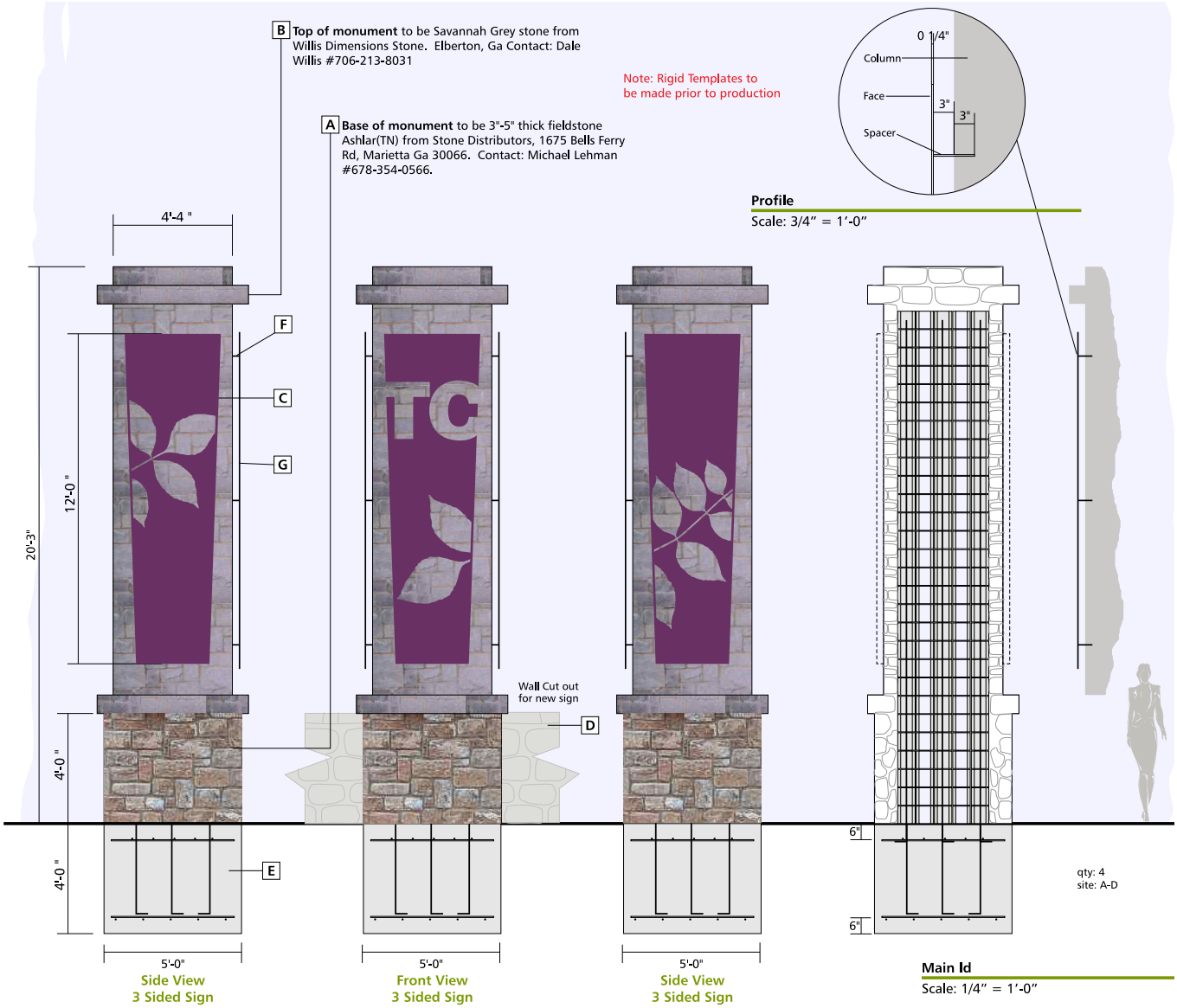

Stone Column, Wall and Seat Wall

Description:

- Face and cap stone (savannah grey stone from Willis Dimensions Stone. Elberton, GA Contact: Dale Willis #706-213-8031.
- Color samples and mock shall be provided prior to construction.

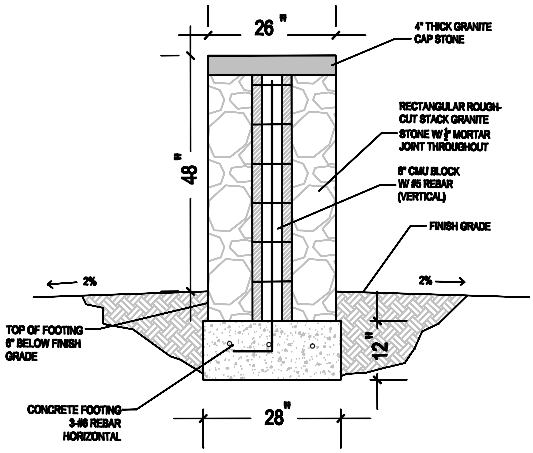

STACK GRANITE WALL SECTION
DETAIL (B)

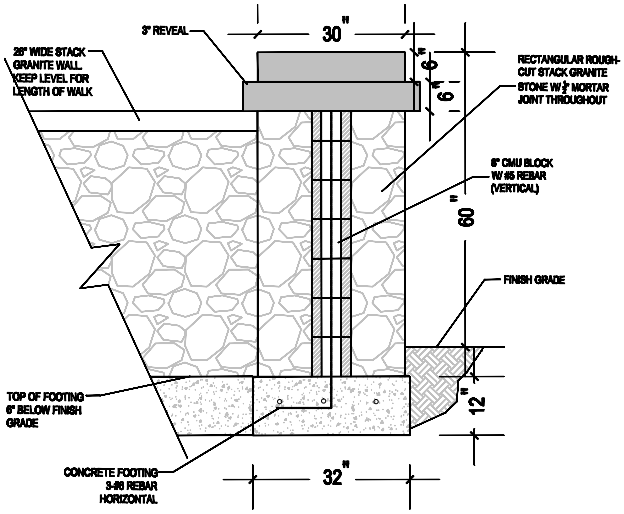

STACK GRANITE COLUMN SECTION
DETAIL (A)

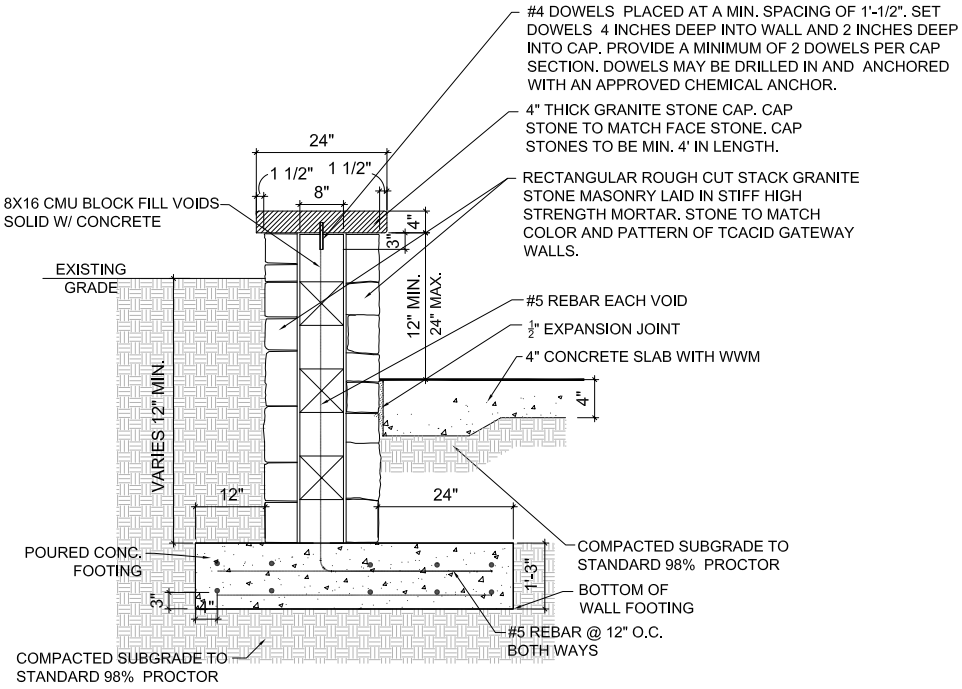

SEAT WALL DETAIL

NOT TO SCALE

Decorative Wayfinding Signage

Description:

- Decorative breakaway pole and base.
- Black powder coat finish.
- Graphic/sign panel.
- Hardware (stainless steel).
- Color and finish: color shall be approved by TCCID.
- Wayfinding signage should be on reflective sheeting.
- Install per manufacturer's recommendations.

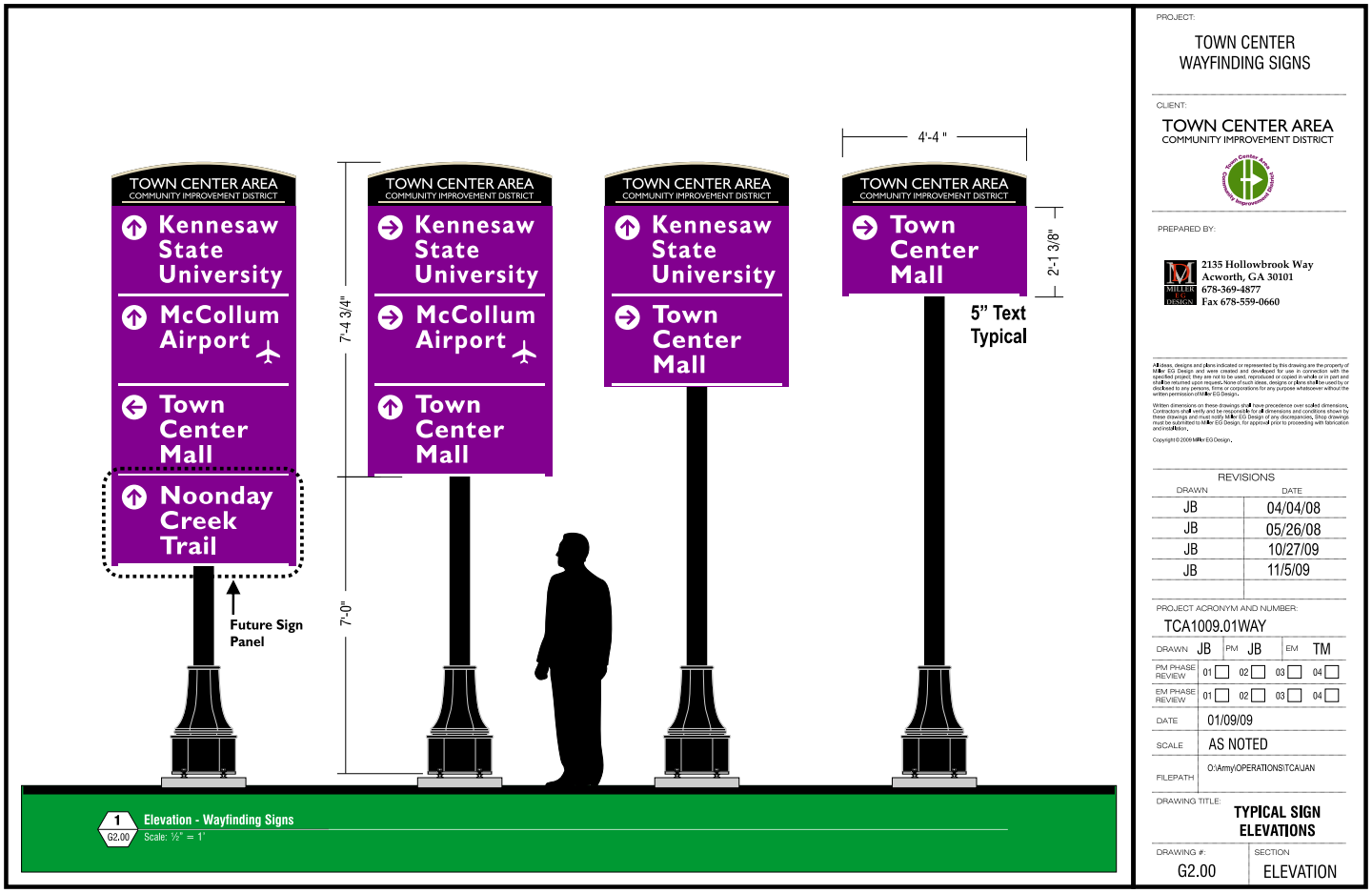

THIS PAGE INTENTIONALLY LEFT BLANK.

II Landscape Design

1.0 Introduction

Together with building design, the proper planning and design of outdoor spaces are critical in fostering the desired atmosphere of the TCCID. The overall landscape concept for this area is intended to enhance public improvements and natural conditions present within the TCCID. All public development proposals must respect the area's natural setting and go beyond preservation of existing trees to include new plantings that harmonize with the existing environment. As a general theme, the proposed landscape shall reflect the qualities of the existing landscape character in the metro Atlanta region. A consistent landscape treatment is critical to unifying the development. This treatment must also respond to aesthetic concerns and to help establish a positive image within the TCCID area for years to come.

Proposed new plantings and landscape features are planned to emphasize entrances and create an inviting experience, and to ensure that the attractive appearance of the development is maintained.

The purpose of the landscape guidelines is to identify specific plant material to be used, tree preservation techniques, buffering, screening, installation, irrigation and maintenance recommendations that are recommended within the TCCID.

Landscape Screening

Screening, where required around public service areas, dumpster, trash containers, mechanical or electrical equipment, shall be provided in accordance with one of the following methods.

Desirable Design Criteria:

- A screening wall or fence of a material similar to and compatible with that of the building. Screening between loading, storage and or dumpsters and parking areas and public streets or neighboring properties, shall be required or, in lieu of this, one of the following two methods shall be used, pending county approval:
- A planting screen consisting of a minimum of two staggered rows of approved evergreen shrubs with a minimum height of six feet installed, and a maximum spacing suitable to the particular plant used while forming an effective visual screen.
- An earth bank or berm minimum 3-feet high with a maximum side slope of 1 to 3 and covered with an acceptable native shrubs and trees suitable to the slope used.

Description of Plant Material Species and Recommended Size

Trees, shrubs and ground covers shall be of a variety that is indigenous to the surrounding area. It is recommended that a registered landscape architect be consulted to choose or approve the proper tree species and prepare the design. Tree species shall be noted on landscape drawing submittals and are subject to approval by the TCCID. A list of approved trees, shrubs and ground covers has been selected for landscape use. It is intended that through consistent, repeated use of these species, the overall development will be unified. The landscape elements to be used fall into the following categories:

Shade Trees: shall be full-headed deciduous specimens, 3 inches in caliper or larger. They shall be used for shade or features, either individually or in clusters.

Street Trees: are herein defined as trees, on either side of all streets or right of ways. Street trees are crucial in providing the characteristics and aesthetic quality of the corridor. They provide shade, ensure drivers roadway attention, and create a safety buffer between the sidewalks and travel lanes. Street trees should be a minimum of 3” caliper size for deciduous trees. A preferred street tree type is to be selected for a road and used continuously along the corridor. Typically, planted fifty (50) feet on center. Small flowering and ornamental trees can be utilized at intersections or used in addition to the Street trees to provide accent and color. Trees planted withing the roadway clear zones should not exceed four (4) inch caliper at maturity. Trees should not be planted within intersection or driveway sight distance triangles. Trees and other plantings should not restrict roadway stopping sight distance especially on roadway curves.

Evergreen Trees: shall be used in masses of general background planting, for screening and framing buildings or views. They may also be used as massed, freestanding elements for special effects. Minimum height for these specimens shall be six (6) to eight (8) feet in height.

Small Flowering / Ornamental Trees: shall be grouped in randomly arranged clusters as foreground plantings. They may also be grouped for accents or other effects requiring seasonal color. Planted a minimum of 1,1/2” caliber and twelve (12) to fourteen (14) foot height and a maximum of twenty (20) feet on center.

Evergreen or Deciduous Shrubs: shall be massed for screening, background, planters or foundation planting. They may be used as freestanding elements as low landscape features, but should always be used in masses or groups. Minimum of 3 gallon plants and planted according to spread characteristics. Shrubs should not be located within the sight distance triangle unless they do not exceed three (3) feet in height at maturity.

Hedges: are used to define the property lines and the public realm, and to differentiate between property lots. Planned properly using a combination of groundcovers, shrubs and ornamental grasses hedges can are used to define outdoor rooms of yards. Hedge height varies depending on site location and conditions. Hedges should be planted at a minimum of 3 gallon plants. Hedges should not be located within the sight distance triangle unless they do not exceed three (3) feet in height at maturity.

Ground Covers: shall be used on all slopes steeper than 2.5 to 1. They may also be used in flat areas either alone or in combination with other plant materials for a massed effect. They may also be used to aid in erosion control as well as visual appearance. Plants shall be a minimum of 4” pots.

Grasses: shall be planted as sod to form lawns wherever practical, i.e., slopes of 2.5 to 1 or less. Lawns may be interrupted only by paving, trees or the mulched beds of other planting materials. All lawn areas shall be common bermuda.

Earth Mounds: are intended to create a soft, gentle rolling effect on an otherwise flat plane. They are to gradually taper into the surrounding area from a maximum slope of 3 to 1 and should have softly rounded tops for ease in mowing. When used repeatedly, mounds should create an irregular natural appearance with variations in both height and width. They are recommended as screening devices, with or without plant materials, to lessen the visual impact of service and parking areas. They may also be used where practical in front of setback areas for a soft visual effect. Although they may be used in combination with plant groupings, mounds are to be planted mainly in grass, with only clustered plant or tree groupings emerging.

2.0 Recommended Plant Palettes

The following list constitutes the recommended tree species for the Town Center CID.

a. Small Flowering/Ornamental Trees (less than 30 feet tall at maturity)	
Scientific Name	Common Name
Acer buergerianum	Trident Maple
Cercis canadensis	Redbud
Cornus kousa	Kousa Dogwood
Lagerstroemia indica	Crape Myrtle (Natchez, Muskogee, Sioux, Tonto)
Prunus 'Okame'	Okame Cherry
b. Shade Trees (more than 30 feet tall at maturity)	
Scientific Name	Common Name
Acer rubrum	Red Maple (October Glory, Red Sunset)
Quercus falcata	Southern Red Oak
Quercus lyrata	Overcup Oak
Quercus nuttallii	Nuttall Oak (Sangria, Highpoint)
Quercus phellos	Willow Oak (Hightower)
Quercus schumardii	Shumard Oak
Ulmus parvifolia	Lacebark Elm (Bosque)
c. Evergreen Trees	
Scientific Name	Common Name
Cedar deodara	Deodar Cedar
Crytomeria japonica	Crytomeria Yoshino
Ilex x 'Mary Nell'	Mary Nell Holly
Ilex x 'Emily Bruner'	Emily Bruner Holly
Ilex latifolia	Lusterleaf Holly
Ilex x 'Nellie R. Stevens'	Nellie R. Stevens Holly
Ilex opaca	American Holly
Magnolia grandiflora	Southern Magnolia (Claudia Wannamaker, Little Gem, Alta)
Thuja	Arborvitae (Green Giant)

d. Recommended Shrubs:	
Scientific Name	Common Name
Abelia grandiflora	Glossy Abelia (Rosecreek)
Camellia japonica	Camellia
Cameillia sasanqua	Camellia
Euonymus alatus	Dwarf Burning Bush
Hydrangea	Hydrangea (Nikko, Limelight, Oakleaf)
Ilex cornuta burfordii 'Nana'	Dwarf Burford Holly
Ilex cornuta "Carissa"	Carissa Holly
Ilex vomitoria "Dwarf Schillings"	Dwarf Schillings Holly
Loropetalum chinensis	Loropetalum (Purple Diamond, Emerald Snow)
Rhaphiolepis indica	Indian Hawthorn
Rosa sp.*	Rose (Drift or Double Knock-Out - Pink)
Rhododendron sp.*	Azalea
e. Recommended Groundcovers:	
Scientific Name:	Common Name:
Trachelospermum asiaticum	Asiatic jasmine
Liriope spicata	Lilyturf
Pachysandra terminalis	Pachysandra
Recommended Turf Types:	
Location:	
Open / Sunny / Flat Areas	Common Bermuda Sod(Tiffway 419 Sod)
Along Major Streets	Common Bermuda Sod (Tiffway 419 Sod)

3.0 Irrigation

All landscape improvements are recommended to be irrigated until plant material establishment. Irrigation should follow CCDOT guidelines and requirements. Permanent, temporary, and drip irrigation systems shall be utilized until plants are established (typically 3-5 years). Regularly scheduled hand watering methods shall also be accepted to maintain the proper health of the landscape material. Below is a list of irrigation design standards that shall be used for design and construction of irrigation systems within the TCCID.

Design Criteria:

- For mechanical methods, irrigation systems are to be below ground, fully automated and in compliance with applicable building code and plumbing requirements.
- Drip or pop-up spray sprinkler heads should be used for mass planted shrub or flower beds.
- Pop-up spray and/or impact rotor heads should be used for turf areas.
- Due to differing watering requirements, shrub beds and turf areas should be irrigated from separate control circuits/ zones whenever possible.
- Sprinkler heads should be spaced according to manufacturer's recommendations.
- Irrigation heads near sidewalks, streets, parking areas, and any other paved surface shall be adjusted to minimze overspray onto pavements.
- All irrigation mainline pipe, irrigation lateral pipe, and control wiring passing beneath pavements must be contained in permanent sleeves.
- Adequate backflow prevention measures are necessary for health codes and requirements.
- All control boxes and backflow control devices must be located or screened so that they are not visible from public streets or parking lots.
- All pipe to be installed as per manufacturers' specifications.
- Contractor to be responsible for proper coverage of areas to be watered.